G001

MODEL Gogo 高高模型

海牛·改
RX-93-ν2
Hi-νE·V·O

FOR AMURO RAY'S CUSTOMIZE MOBILE SUIT FOR NEW TYPE

1/100 SCALE MODEL『比例模型』

包装上图片、插图和实样产品可能会有所不同，请谅解。
Illustration and picture on package may vary from actual merchandise.

RX-93-ν2 Hi-νE·V·O

U.C.0092年末，夏亚统领的五艘舰艇秘密潜入殖民行星5外围的宇宙居住区。潜入后不久，由夏亚统领的新吉翁军就占领了联邦为收容难民而建立的居住区“甘泉”。夏亚还发表宣言：“如果不承认其主权，将直接攻击联邦政府的根据地西藏的拉萨。”同年12月25日，联邦军在外围部队“朗德·贝尔”，为平定“夏亚的叛乱”而重新组装组编，并组成一支精锐部队前往平定乱事。但是，部队因战斗力不足，再加上联邦军的上层部队“新人类”的驾驶员讨厌使用战士系列的机体。因为之前的战士，好像隐藏有核武器。U.C.009年，实战经验非常丰富的布莱德·诺亚大校赴任朗德·贝尔部队的指挥官。RX-93-V2海牛，原来是地球联邦军月面城市“冯·布朗市”的近郊的AE阿纳海姆电子公司开发的新型机体，并将此机体作为送给布莱德赴任的礼物，以便扭转战局。驾驶员兼技师大驾驶员阿姆罗·雷大尉在此机体上安装了自行设计的脑波传动系统，并将此机体作为朗德·贝尔的制式采用机。基本设计师在历代类型“战士类型”的平均水平上进行升级。因此，此机体更复杂化、更巨大化，其设计同当时的机体的设计倾向是背道而驰。最大的特点是采用攻防一体的浮游飞翅炮,这一点正说明了此机体是“战士的最初类型的NT专用机”。当初，此机体的脑波传动系统是为了控制“飞翅炮”。新吉翁军获得这一套精神感应骨架后，机体的设计倾向完全随着改变。精神感应骨架是将具有脑波传动系统能力的精神感应晶片缩成金属粒子的大小，再植入MS的骨架结构之中。驾驶员的意志可以透过脑波传动系统直接输入驱动系统中，使得机体的机动行大幅度提升。阿姆罗将其评价为“好像有使搭乘者更向前突进的强制力”。精神骨架的组装作业队阿姆罗来说是无聊的作业，阿姆罗自身也曾怀疑NT的能力，但因为认可浮游飞翅炮控制作用而强行安装。不过，从使用状况来看无疑是按新吉翁军队透露的意图制作，其实精神感应系统是夏亚为了公平打败海牛而透露给AE公司。不过，朗德·贝尔提高了机体的水准，并能够与新吉翁军相对抗却是事实。终于，海牛作为阿姆罗驾驶的机体而被运用。海牛，实际上是短期内（只有三个月）完成的机体。随着战斗升级朗德·贝尔不得不再次对海牛进行升级加强，以应对更加残酷的战斗，于是新型MS机甲-海牛II诞生了。新型MS机甲-海牛II在外观上升级改造了许多提高机体机动性和稳定性部件；火力方面，重点升级了浮游飞翅炮的火力输出及其机动性。在某种意义上，新型MS机甲-海牛II这一系列的升级加强将对这场日渐激烈的战争起到决定性的作用，对日后新型机甲的研发打下坚实基础。

At the end of U・C・009,Shaa leda five battleships secretly enter the space colony of SIDE5 periphery .Sonn after that ,Neo Zeon army lead by Shaa occupy “Sweet welter ” ,the live zone that Earth Alliance built to accept refugee .Shaa pronounce: “If disavow the dominion of it ,we shall attack Lasha Tibetthe base of Alliance name Roundebell reorganize to pacificate “insurgence of Shaa ” ,it buildup a elite army to drive mechanism of MS sereis.Because the MS of later seem as hide nuke .12 U.C.009,senior colonel Black Noah with plenty actal combat experience go to his post of Roundbell command .RX-93-V2 Hi-Nu,at first as a new MS designed by AE which lie in outskirts of Earth Alliance moon surface city“Von Braun”,it is sent to Black as a take post gift to turn the battle situation .The pilot and techician senior captain Amuro Ray mount Psyco comunication system create by himself on this mechanism,and use it as the standaed MS of that Roundbell command .The basic design of it is upgrade on average of past stages “Fighter type”.So ,the mechanism is more complication and large-scale,the design idea of it is runcounter to the incline of that time. The ultimate specialty of it is using attack and defend in one Fin Funnel.This point show it is “the prime special mechanism of fighter ” .After New Zeon army get a suitof psycoframe the poiarity of design change compietely.Psycoframe shrink the psyco chip with brainwave tranfer ability to metal particle,than plant it into the framwork stucture. Pilot’s will can input to driver system ,it take great porgress in flexibility .Amuro appraise it saying “Itseem that it give the passenger has the discipline to go ahead” The work of assembling Psycoframe is senseless to Amuro,and Amuro disbelieue the capability of NT ,but he recognize the control capability of fin funnel so he force to assemble it .But seen by using status ,it is made by the intention be divulgated by New Zeon .In fact the psyco system is divulagated to AE industry by shaa ,he want to defeat Hi-nu fairly.But Roundbell improves the level of MS at last ,and in fact it can confront to New Zeon army .At last ,Hi-nu is used as the MS piloted by Amuro .In fact ,Hi-nu is one MS that completed in short order(only three months).Tt is engouh to prove the maturity of movable frame and the repayment of all technicians working day and night .In addition,Amuro is good at the MS himself .Although it is base on the originally Union MS,but it has the side very poignant and impressible.In a manner ,the MS is created base on difficult to keep balance.

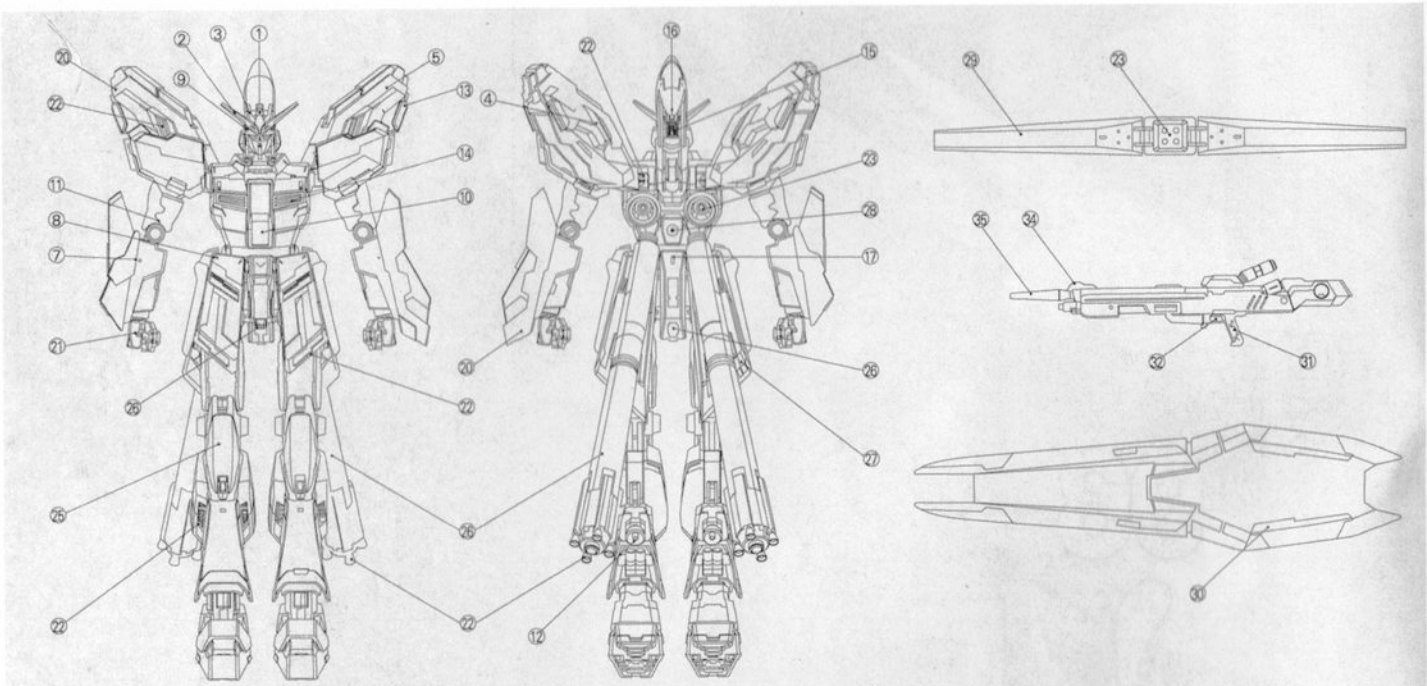

①主摄影机 Main camera
②通信用刀型天线 Blade antenna
③复合型感应器 Multi sensor
④替补感应器 Sub sensor
⑤60火神炮 60 fire-fiend gun
⑥前部装甲 Front armer
⑦侧面装甲 Side armer
⑧新接合器 New joint
⑨双目感应器 Dual sensor
⑩驾驶舱升降口 Cockpit hatch
⑪保养仓口 Maintenance hatch
⑫能量供给器 Power supplier
⑬肩膀装甲 Arm armor
⑭进气口 Intake duct
⑮浮游飞翅炮架 Fin Funnel support
⑯水平尾架 Stabilizer
⑰连接器 Linker
⑱放射配件 Emit part
⑲光束军刀 Beam saber
⑳军刀架 Saber support
㉑机械臂 Manipulator
㉒副推进器 Sub-thrustor
㉓主推进器 Main thrustor
㉔机关枪 Machine gun
㉕膝盖装甲 Knee armor
㉖微型推进器 Mini-thrustor
㉗螺旋桨推进器配件 Air-screw thrustor part
㉘后部装甲 Back armor
㉙浮游飞翅炮 Fin funnel
㉚配线管 Duct
㉛把手 Grip
㉜扳机 Trigger
㉝弹仓 Magazine
㉞窄感应器 Narrow sensor
㉟枪口 Muzzle

注）此机体是开发的新型机体，并安装浮游飞翅炮和精神感应骨架等，并经最终调整的机体。

组装前的说明 INSTRUCTIONS OF ASSEMBLING

必要的工具 TOOLS YOU NEED WHEN ASSEMBLING.

老虎钳〈Pilers〉 剪塑料胶件用 use to cut plastic parts

用于剪切塑料胶件剪下各配件。
It is uesd to cut off plastic parts and other parts.

镊子〈Niper〉

用于组装较小配件或贴上贴纸。
Used to assemble little fittings and paste stickers.

剪刀〈Scissors〉

剪切人物贴纸时使用。
Be used to cut the custom seal.

此产品没有配套工具，请另外准备。
Tools and not included,please purchase then in addition.

说明书的阅读方法 HOW TO READ THE INSTRUCT IONS.

说明书所述配件的编码和料件的编码相同，请对准配件一览，寻找配件编码。
The number marks on the instructions' s parts are the same on piastic parts. please collate the parts list to find the parts Number.

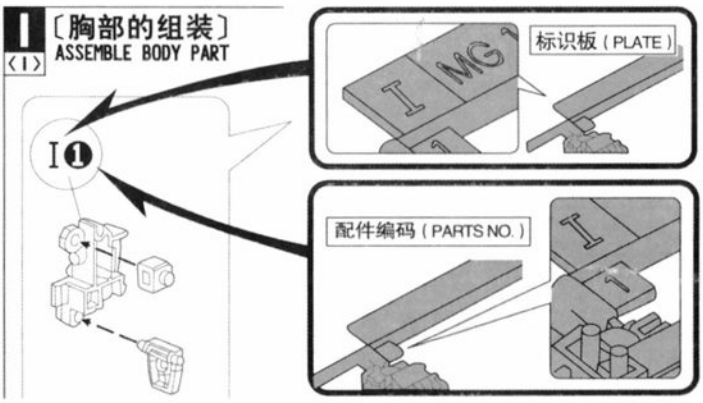

配件的剪切方法 HOW TO CUT THE PARTS.

剪切时，老虎钳稍微偏离料件的位置，用钳嘴进行剪切。
When cutting,put the edge of pilers on the postion little wareped of the parts,and use the edge to cut.

切离配件时，请拿配件易拿处，并沿出水口的纹路处理。
When cut the parts,please hold the position easy to cut and hold,and cut along the lines of gate.

老虎钳的钳嘴需紧贴配件，剪切出水口。
Put the edge of pilers close to parts and cut the gate.

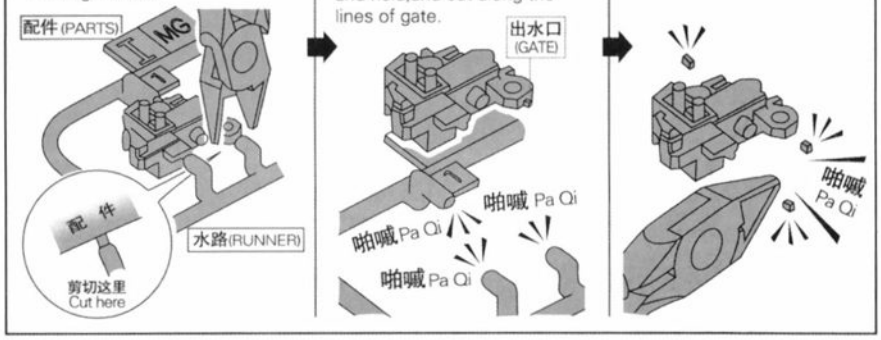

上部出水口的剪切方法 HOW TO CUT THE GATE OF UPPER BODY

如下图，剪切 J2 配件的一部分。Cut slice of J2 part as figure.

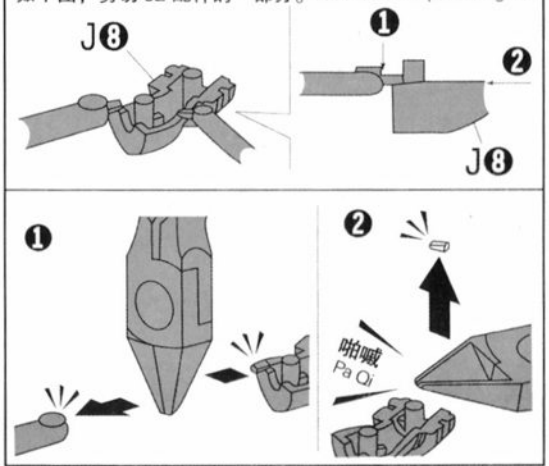

人物贴纸的贴法 How to paste the custom seal.

❶人物贴纸采用柯印膜。

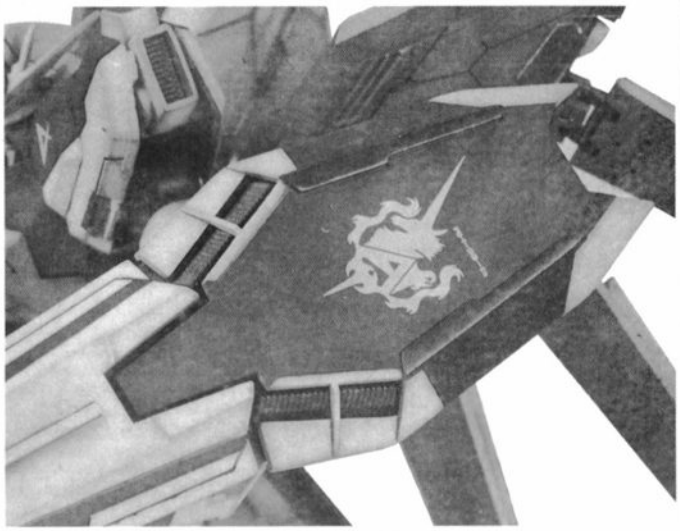

❷贴上贴纸，在确定粘帖的位置后，用双面胶纸等贴紧（注意勿使贴纸偏移），并用圆珠笔等的使贴纸偏移），并用圆珠笔等的

❸当有多于的人物贴纸时，将其重新放入保护膜内，并再次按压一下。

请仔细阅读说明书 Please read the instructiongs carefully.

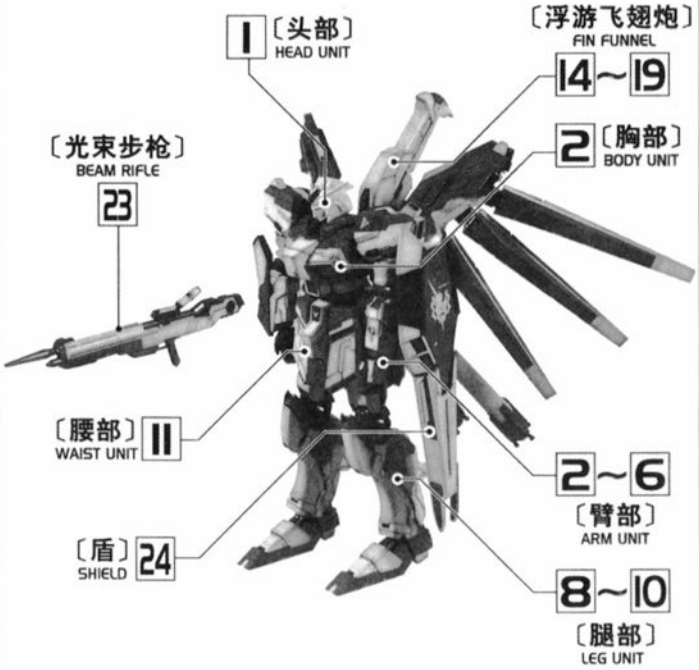

组装时请注意

- 组装前请详细阅读说明书。
- 请将零件按编号整齐组装，组装后把边角料丢弃。
- 零配件当中有带尖锐或刺手的，在组装时请小心。
- 建议在涂装粘贴时使用安全的“水性涂料”。

NOTICE WHILE ASSEMBLING

- Please read the instruction carefully before assembly.
- Please assemble the parts as per the serial numbers anddiscard the leftover material after assembly.
- While assembling,please pay attention that some of the parts may be sharp-pointed or aciculate.
- Please use the safe “aqueous coating” while painting.

• 粘贴 Cling

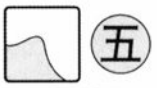

• 贴纸的编号
Numbers on the seals

• 粘贴的编号
Decal number

• 反侧安装的配件
Part installed on revers side

• 反侧安装同样配件
Same parts installed on both side

• 组装时需注意方向
Pay attention to the diredtions when install

• 注意旋紧螺丝
Attention to revolve the screw

• 剪切
Cut off

• 配件数量的个数
Quantity of the part

• 先组装
Earlier install

• 后组装
Later install

• 结合数值旋转
Screw base on the mark unmber

• 选择任一方进行组装
Choose one side to install

• 反侧也是同样转动
Screw the same on revers side

零件目录 Parts list

(X标志为不能使用的配件)
The fittings with symbol X can not use

A 配件 (FITTINGS) BLACK

(聚苯乙烯树脂：PS) Polystyrene:PS

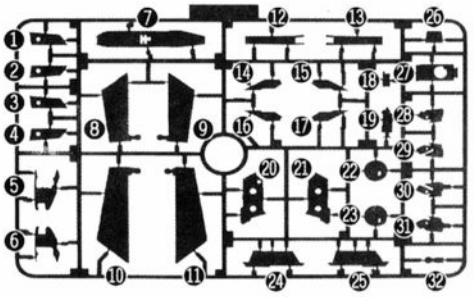

B 配件 (FITTINGS) WHITE

(聚苯乙烯树脂：PS) Polystyrene:PS

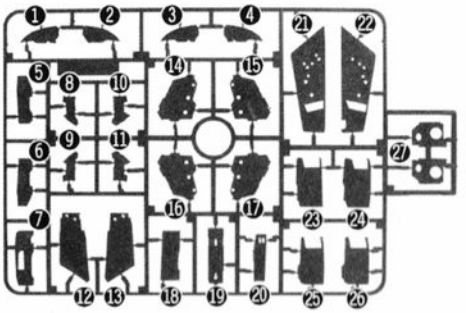

C 配件 (FITTINGS) BLACK

(聚苯乙烯树脂：PS) Polystyrene:PS

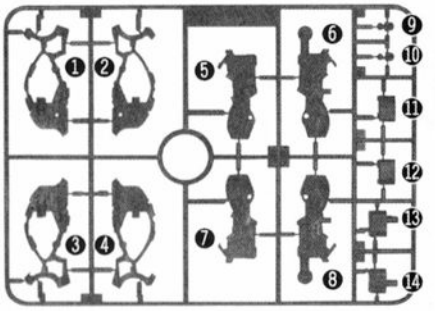

D 配件 (FITTINGS) WHITE

(聚苯乙烯树脂：PS) Polystyrene:PS

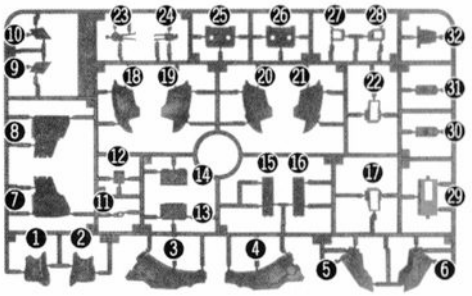

E 配件 (FITTINGS) WHITE

(聚苯乙烯树脂：PS) Polystyrene:PS

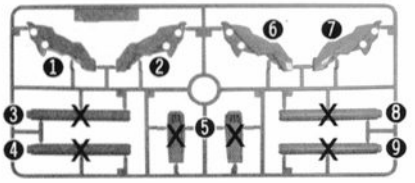

F 配件 (FITTINGS) WHITE

(聚苯乙烯树脂：PS) Polystyrene:PS

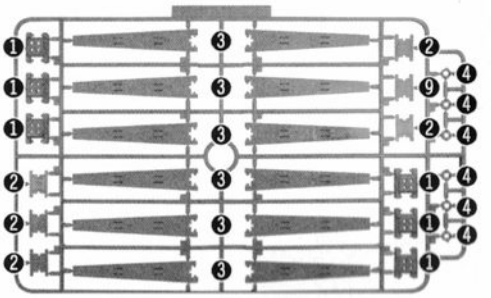

G 配件 (FITTINGS) BLUE

(聚苯乙烯树脂：PS) Polystyrene:PS

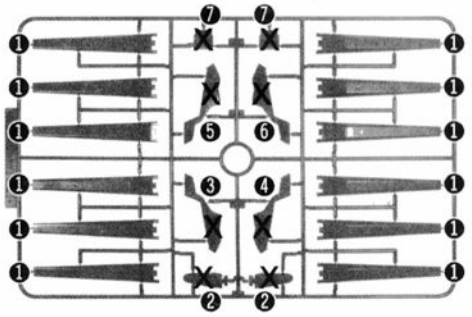

H 配件 (FITTINGS) WHITE

(聚苯乙烯树脂：PS) Polystyrene:PS

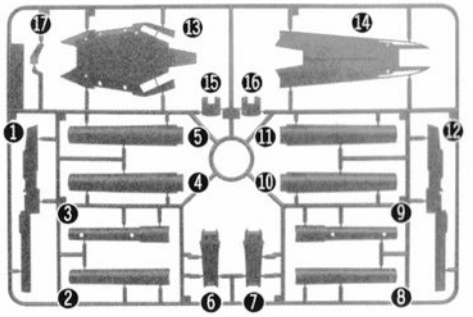

I 配件 (FITTINGS)

(聚乙烯：PE) Polystyrene:PE

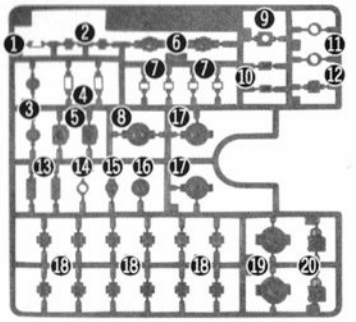

J1 配件（FITTINGS） BLUE

(聚苯乙烯树脂：PS) Polystyrene:PS

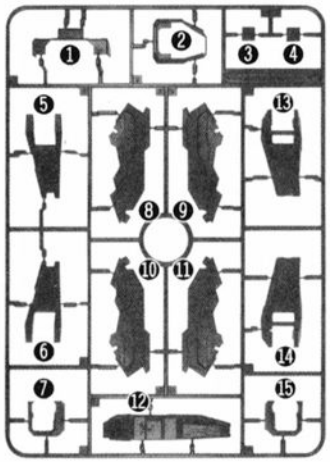

J2 配件 FITTINGS

(聚苯乙烯树脂：PS) Polystyrene:PS

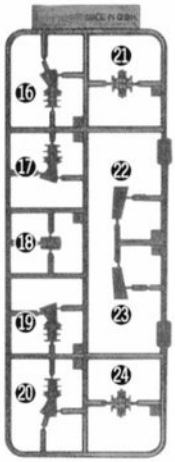

K 配件（FITTINGS） BLACK

(聚苯乙烯树脂：PS) Polystyrene:PS

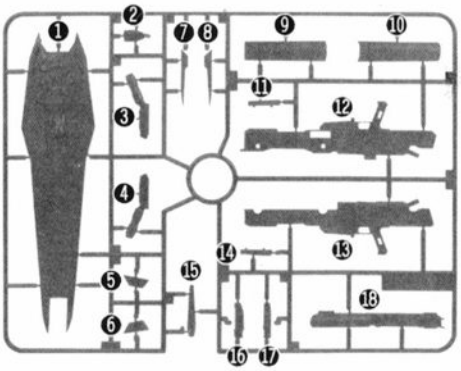

L 配件（FITTINGS） BLACK

(聚苯乙烯树脂：PS) Polystyrene:PS

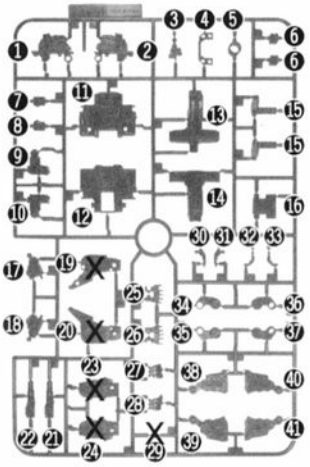

加配件（Plus accessories）

(聚苯乙烯树脂：PS) Polystyrene:PS

M 配件（FITTINGS） BLACK

(聚苯乙烯树脂：PS) Polystyrene:PS

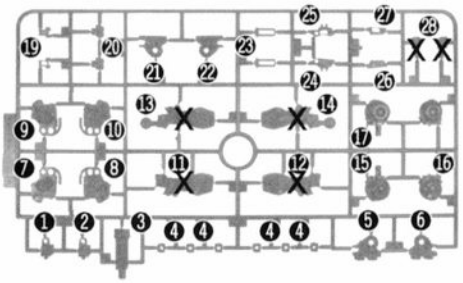

N 配件（FITTINGS） BLACK

(聚苯乙烯树脂：PS) Polystyrene:PS

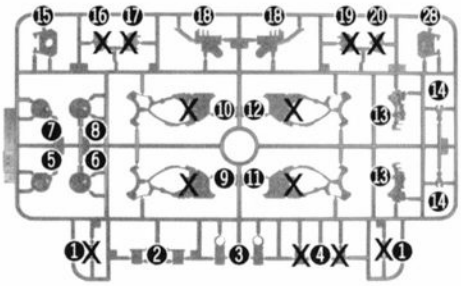

O 配件（FITTINGS） BLACK

(聚苯乙烯树脂：PS) Polystyrene:PS

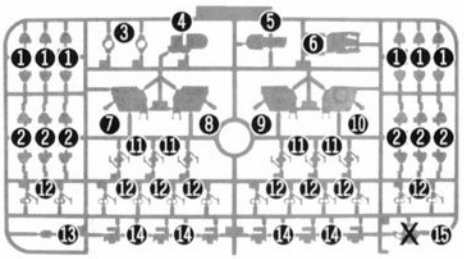

P 配件（FITTINGS）

(聚苯乙烯树脂：PS) Polystyrene:PS

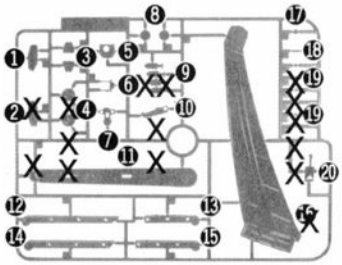

Q 配件 FITTINGS

(聚苯乙烯树脂：PS) Polystyrene:PS

S 配件（FITTINGS） WHITE

(聚苯乙烯树脂：PS) Polystyrene:PS

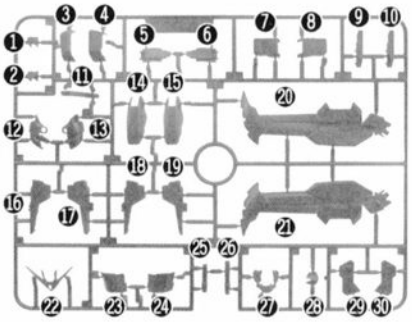

SB 配件（FITTINGS）

(聚苯乙烯树脂：PS) Polystyrene:PS

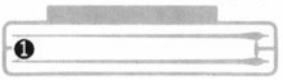

X 配件（FITTINGS） BLACK

(聚苯乙烯树脂：PS) Polystyrene:PS

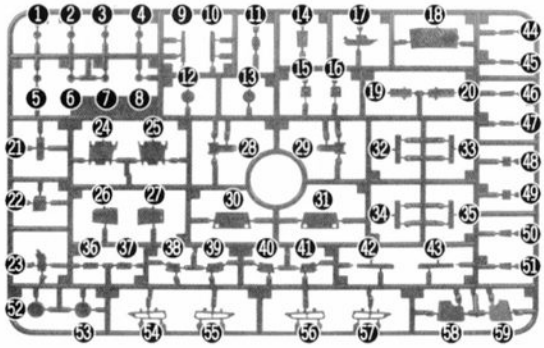

W 配件（FITTINGS） BLUE

(聚苯乙烯树脂：PS) Polystyrene:PS

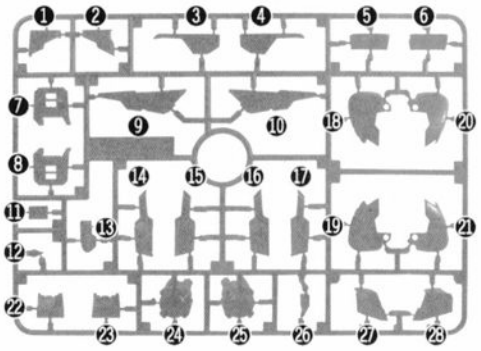

彩色贴纸.....1张
(Color seal)
标示贴纸.....1张
(Mark seal)
人物贴纸.....1张
(Custom seal)

软质清洁棒(Soft clean stick).....6根
（苯乙稀树脂：PS）（STYROL COLOPHONY：PS）
效果 配件（Effect part）.....1张
（PET 树脂：PET）（PET COLOPHONY：PS）

⚠警 告!

- 不适合六岁以下儿童使用；
- 含有小零件，请勿吞食，以免造成窒息危险；
- 内有尖端物小心使用请勿刺人，以免造成伤害；
- 请在成人指导下正确使用。

⚠WARNING:

CHOKING HAZARD–Small parts.Not for children under 15 years.

产品名称：机甲三国
型号规格：见包装盒
执行标准：GB 6675-2003
使用年龄：十五岁以上

版权所有 仿冒必究 MADE IN CHINA

头部,胸部〔BODY&HEAD UNiT〕

RX-93-V2海牛的身体的部位是在RX_78的基本结构标准机体上试作而成。而且，还增设脑波传动系统等等附带机能和增强装甲的材质等。还有，背包党设计理念也加入了很多新的东西。

海牛素体的机体设计，主要是考虑到以后作为量产业。实际上在制作阶段，安装脑部波传动装置上为了确保剩余的空间，并为此改变背包的设计和增设水平尾翼、浮游炮、机库等以使推进器及能量的供给途径的处理更容易、更简单。此时，螺旋推进器和弹库的连接等，有意图的采用信赖性高的一世代前段配件。此机体给人以古典印象，RX-93的制式编号原先是联邦军和AE开发的次世代试作机称呼的编号。在制作过程中，在制作过程中因为增加阿姆罗·雷大尉个人的设计思路，而在末尾增加V2。基础结构也有部分采用Z系的机体结构，变更为新人类专用机的规格、感应器类等采用AE公司独自开发的生物感应器及其派生产品等等技术支援。因此，海牛事实上是非标准的机体。当初，按朗德·贝尔对自身的财政能力要推出开发新型机体的费用是不可能的。但是，因为布莱德·诺亚大校参与筹划　，才扩大财政额度，并使此机体的筹备资金成为可能。当然，夏亚的暴动是情势变化的最大原因。除去脑波传动系统的相关装备外，大部分部件多数使用容易筹备材料和试料。另外，精神感应骨架是从掳获机摘出进行移植。精神感应骨架上将具有脑波传动功能的电脑芯片转成金属粒子的铸造MS用的构造材料。这种构造材料除了使浮游等的全方位攻击兵器的反应更加敏捷、更犀利外；对驾驶员则有能加强其进攻性的说法。

The body of RX-93-Hi-Nu is trial-produced base on the basic structure standard MS RX-78.Further more,it additionally mounted parenthesis ability such as brainwave transmission system and material of enganced armor .In addition,the design idea of enganced armor .In addition,the design idea of pack has add many new things.

The design of MS Hi-Nu's main body,its mostly conisdered point of is it will be use as a vast-produce MS.In actual produce momenr,it use brainwave transmision system to keep remander space,and change the design of pack for it ,and add mounted stabilizer ,fin funnel and hangar to make the management of thrustor and energy supply route more easier and simpler.Here,the linked part of air-screw thrustor and tank used high-dependability the previous generation part consciously .This MS give us a classic impression,the Model No.RX-93 formerly is the No,of second stage trial-produce MS that created by Union Army and AE industry.In making process,because add change idea of senior captain Amuro Ray himself,it mounted V2 in tail,the cadre of it use part of NS structure of Z series MS's size ,the sensors of it use technic of biossensor and spinoff created by AE itself.so Hi-Nu is a off MS in fact.In originally,it is impossible for land・Bell team to assume the cost of empolder a new type MS. But because senior colonel Browd・ join the plan,they extend the finance limited, and make it possible to raise enough financing.Of course,the insurrection of Shaa is the most important reason of situations's change.Except the interfix equipment of brainwave transmission system,a majority of parts are used material that easy to supply to supply and trial-produced.In addition,the psycoframe is transplant from capture MS.Psycoframe is a tectonic material of MS that can shrink the psyco chip with brainwave tranfer ability to side of metal particle.This tectonic material except can make the all-direction attack weapon such as fin funnel and etc become more quickly and high efficiency,therehas the parlance that it can enchance the attack-desire of pilot.

I 头部部件〔HEAD UNIT〕

组装I使用的配件 Parts to assemble I

S

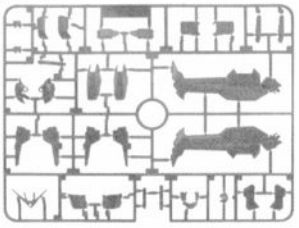

W

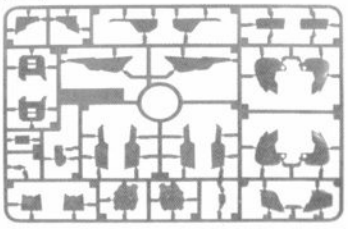

I

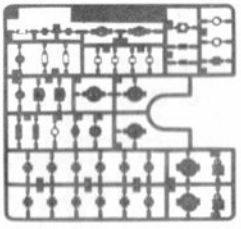

I 〔头部的组装〕

I〈1〉 ASSEMBLE HEAD UNIT

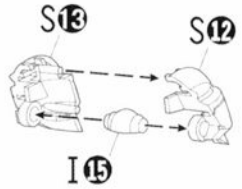

I〈2〉

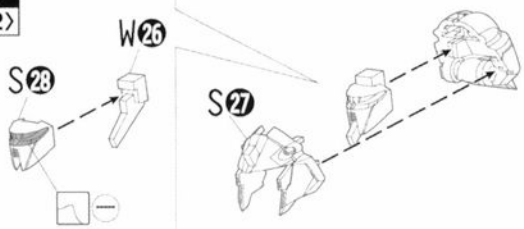

I〈3〉

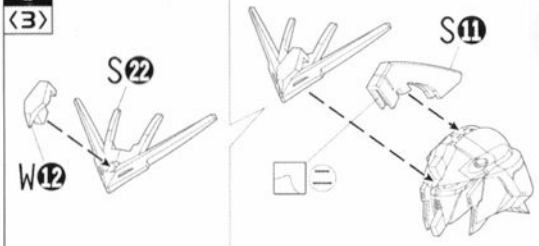

2 胸部部件〔BODY UNIT〕

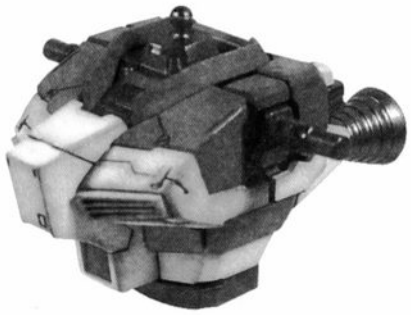

组装2使用的配件 Parts to assemble2

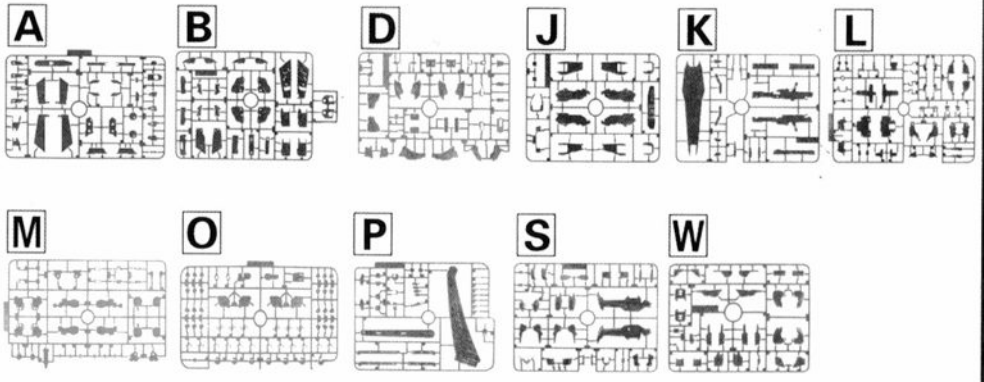

2〈1〉〔胸部的组装〕ASSEMBLE BODY PART

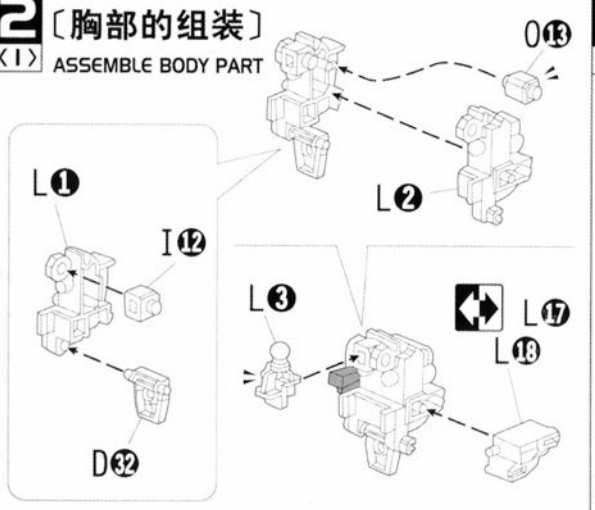

2〈2〉

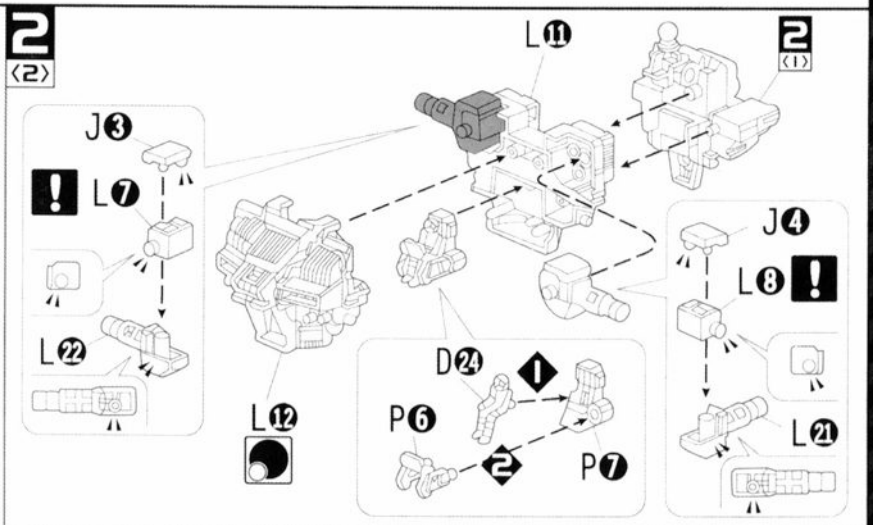

2〈3〉

2〈4〉

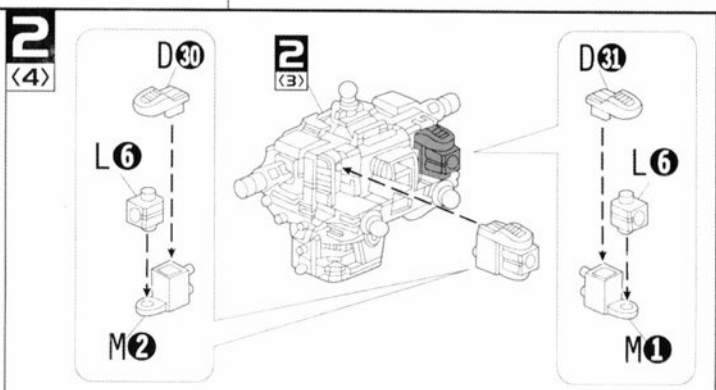

2〈5〉

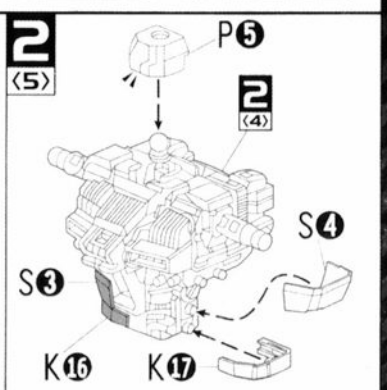

2〈6〉

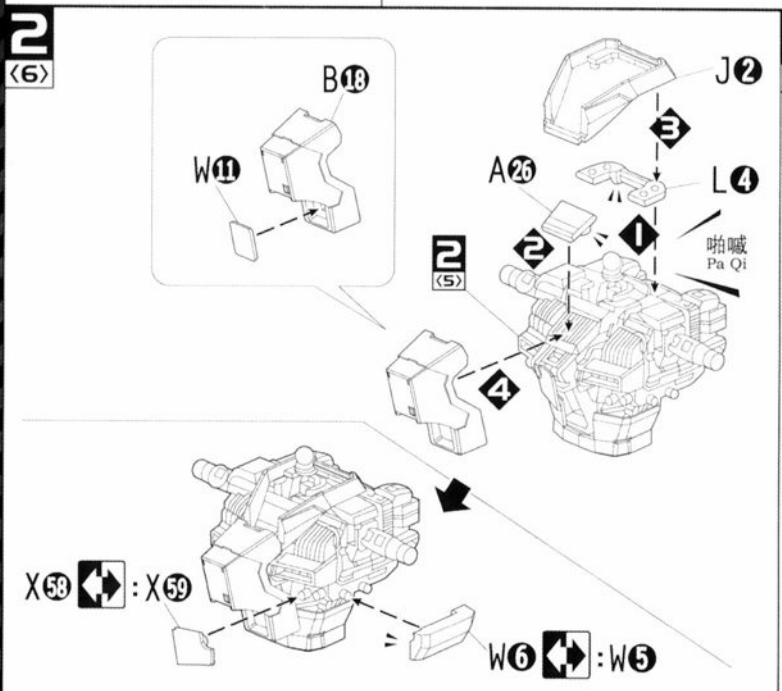

2〈7〉

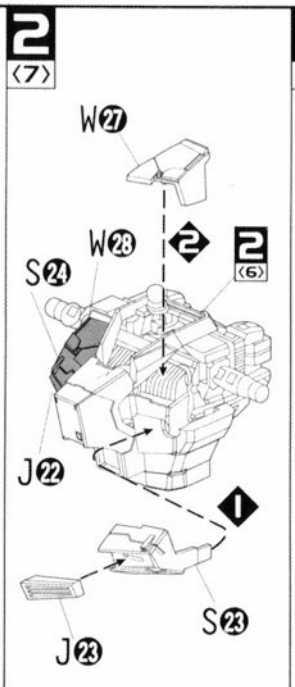

2〈8〉

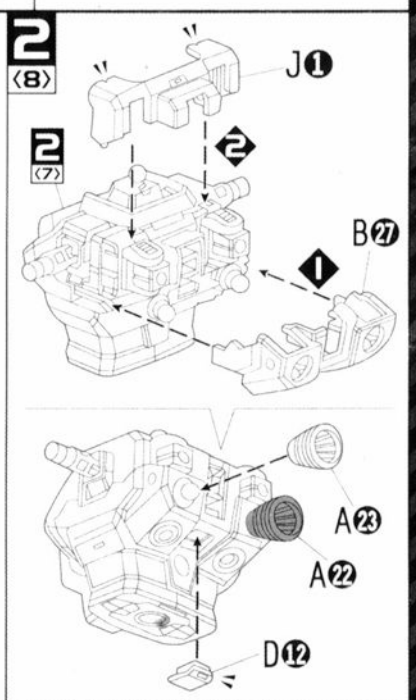

臂部〔ARM UNTi〕

海牛的胳膊和其他MS的基本构造一样使用统一的活动骨架。不过，为了增加机能和改造更容易，消耗品以外的部件、线路等都超过标准规格。

设计海牛时，阿姆罗留心的首先是可靠性和耐久性高，并为了在长时间战斗中更易保养和升级，而使用最容易更换的规格，并使各部配件模块化。为此，自捷普斯战争以来就颇有实际的活动骨架的结构虽然很适合，但阿姆罗任对其改装，并使各装置更易更换。简单的说，为达成必要的规格，而使机体大型化、内部空间更充足。右胳膊安装火神炮，左胳膊安装备用的光束军刀。在首次展示之后不久的战斗，除了能作为实验用反馈资料，还有利于精神感应骨架的装换。除去这些要素，海牛胳膊部是非常基本的构造。启动稳定，万一和敌人MS的机械臂进行突击战，也不会损坏其他机能，是可靠性非常高的部件。

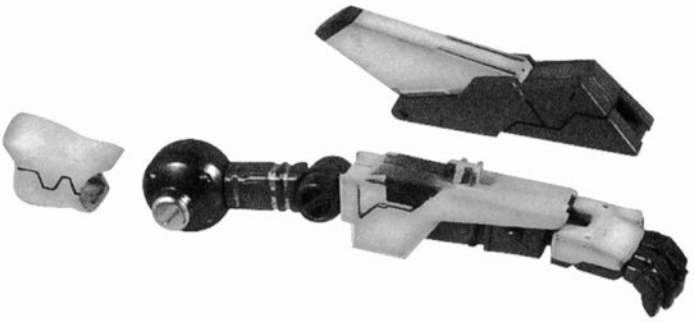

The arm unit of Hi-Nu use standard movable frame as basic structure of other MS.But for increase the capability and make it easy to change,parts and line except expendable are all used exceed standand spec.

Amuro care for high dependability and wear at first when he design Hi-Nu,and for easily tomaintain and upgrade in long time battle,it used the parts easyest to replace and make parts modularize.There for,althouge the movable frame structuew has proved useful from Gryps conflict is so suitabke,but Amuro redo it to make devece of it easyer to replace,At a word,he make the MS largen and make the inner space more pkenteous tu get necessary standard.Fire-fiend gun is mounted in righe arm and beam saber is mounted in left arm.The data of battle soon after rollout can except use as feedback informations of examination,it is propitious to replacing of pyscoframe.The arm unit of Hi-Nu is very basal structure except these factor.It is stably when start up,in case break out confilict bewteen manipulator of enemy MS,it will not attain other ability,it is a very high-dependability part.

3 4 臂部〔ARM UNIT〕

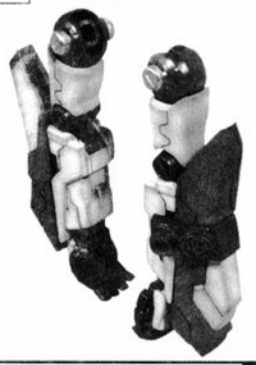

组装3 4使用的配件 Parts to assemble3 4

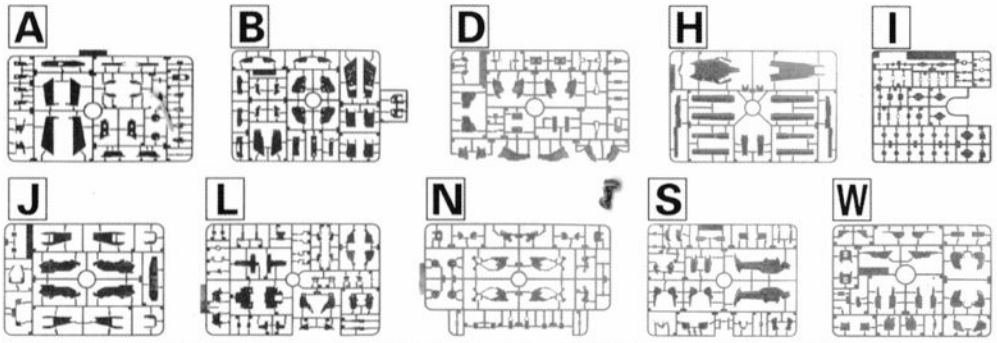

3 〈1〉〔右胳膊的组装〕ASSEMBLE RIGHE ARM

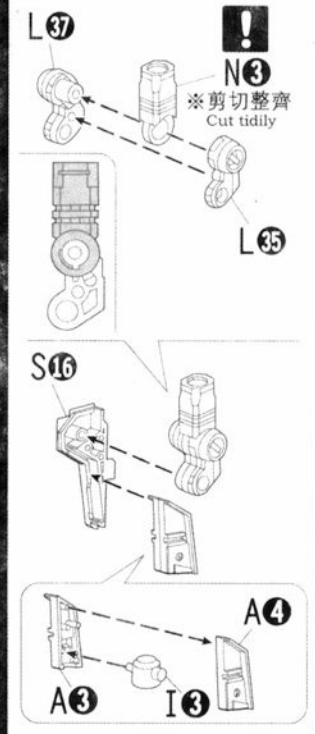

3 〈2〉

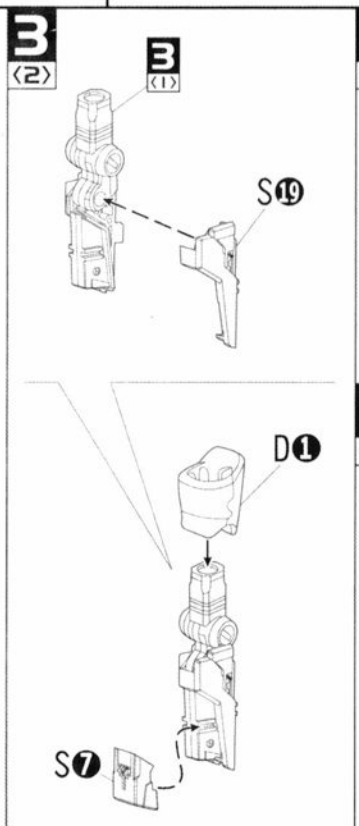

3 〈3〉

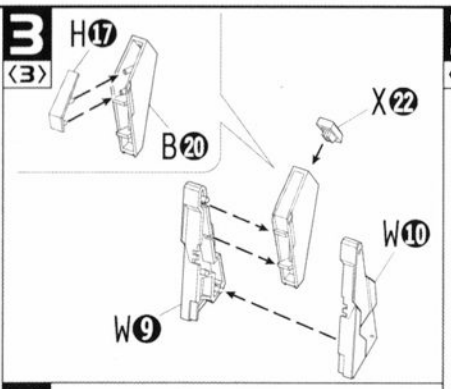

3 〈4〉

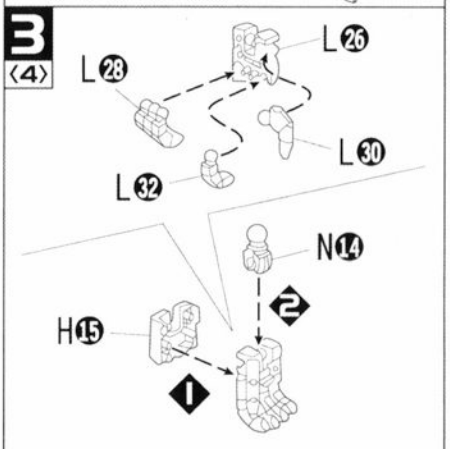

3 〈5〉

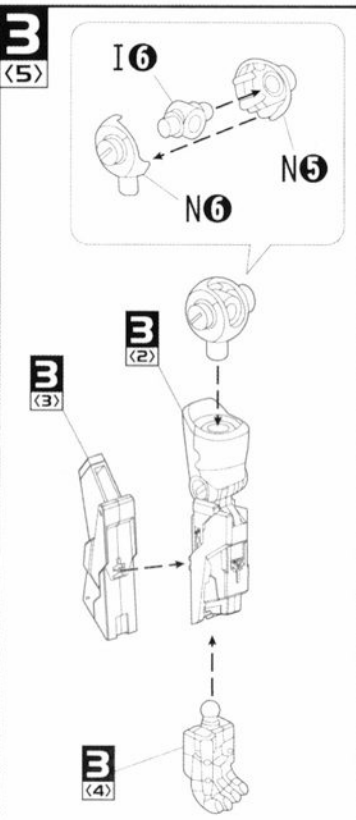

4〈1〉〔左胳膊的组装〕ASSEMBLE LEFT ARM

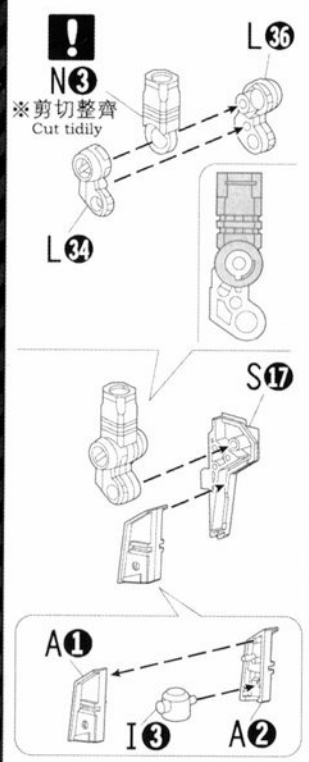

4〈2〉

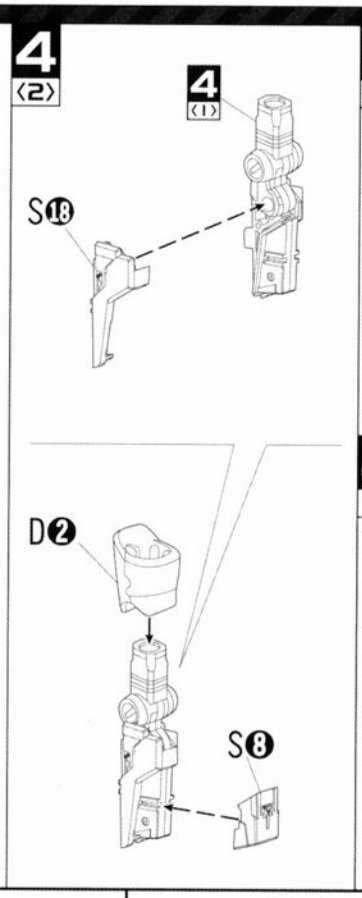

4〈3〉

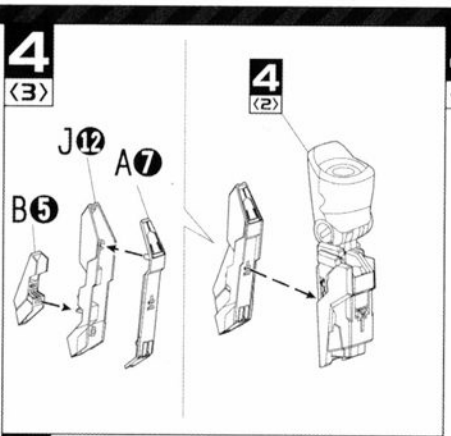

4〈4〉

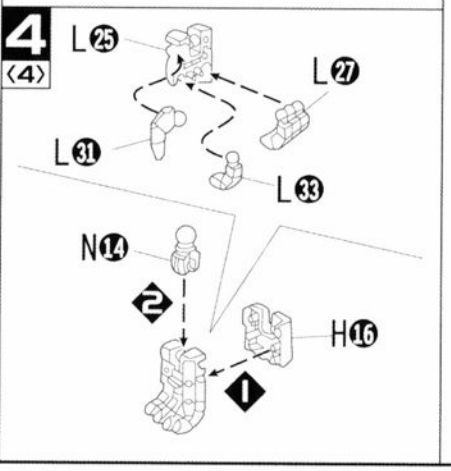

4〈5〉

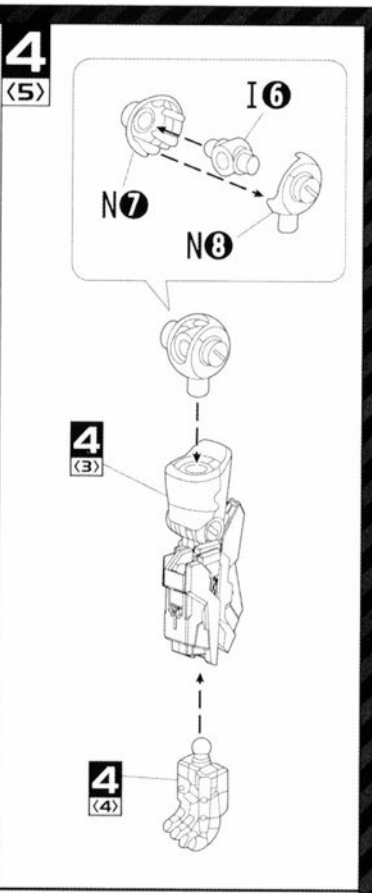

5 6 肩部〔SHOULDER〕

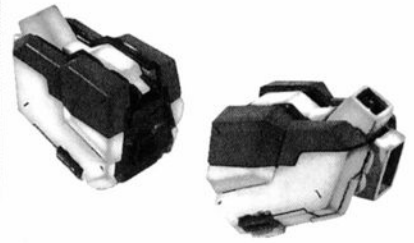

组装5 6使用的配件 Parts to assemble 5 6

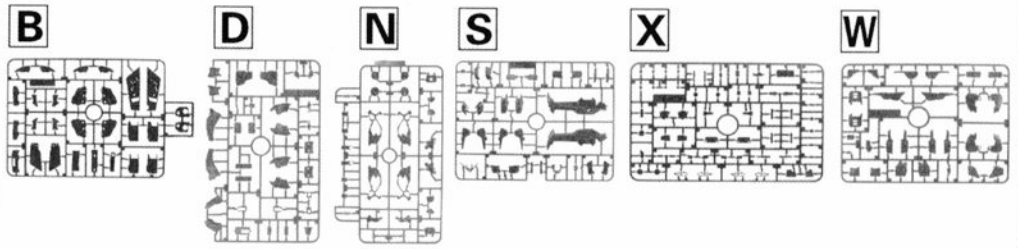

5〈1〉〔右肩膀的组装〕ASSEMBLE RIGHT SHOULDER UNIT

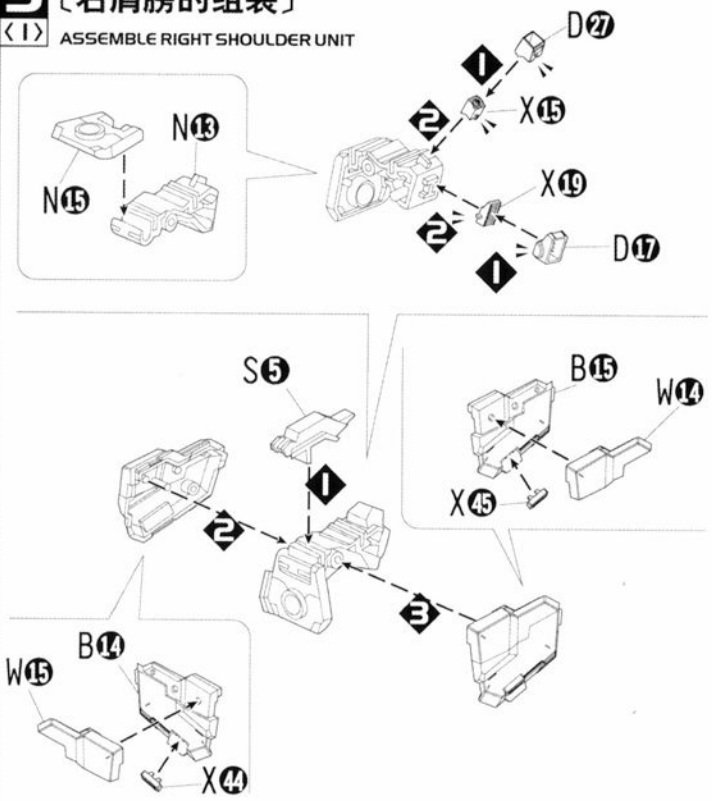

6〈1〉〔左肩膀的组装〕ASSEMBLE LEFT SHOULDER UNIT

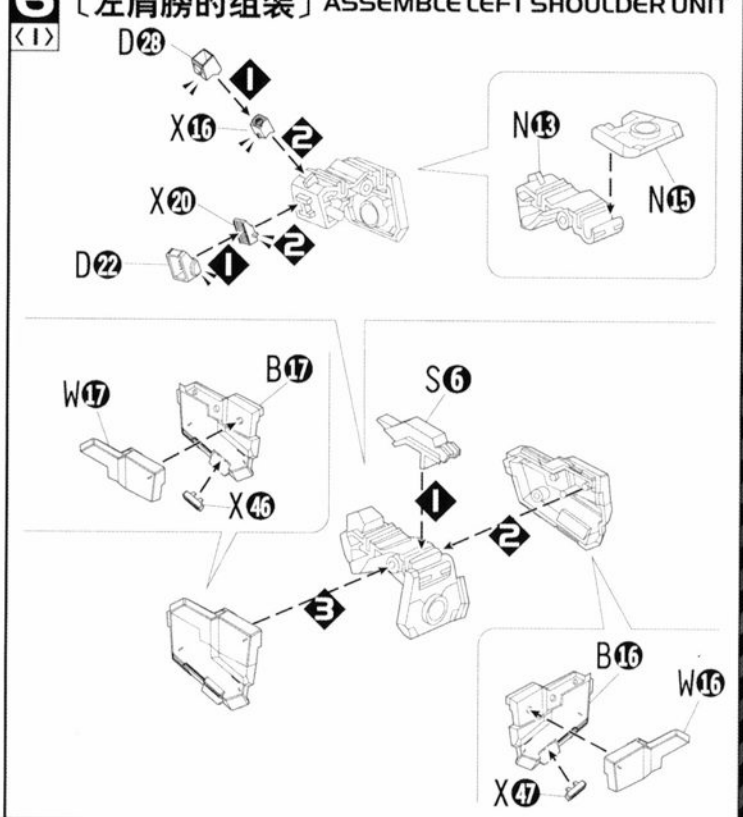

7〔完成上半身的组装〕FINAL ASSEMBLE UPPER BODY

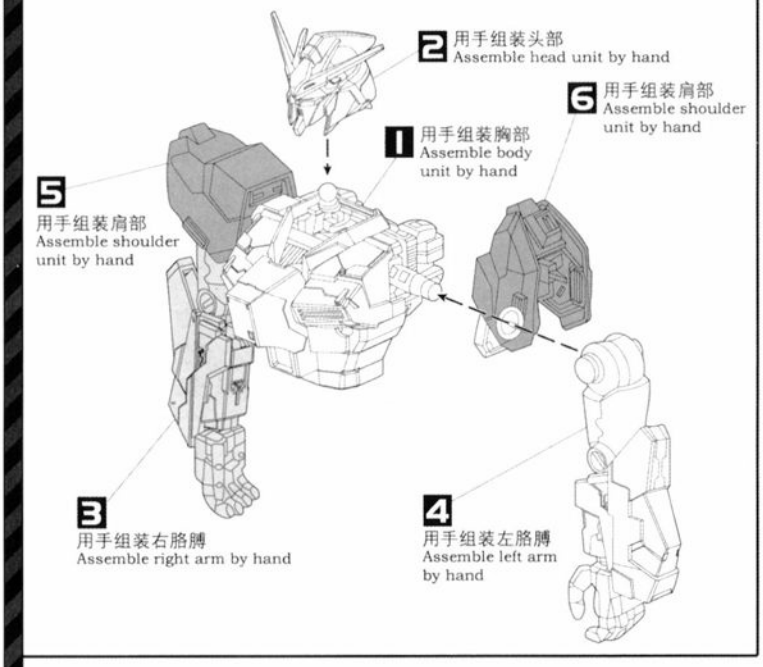

脚部〔LEG NUIT〕

空间战斗用的MSA脚部，基本是作为巨大的火箭锚发射功能。据点攻略、防卫和登陆任务，向母舰的登陆。作为步行脚的脚部也是不可缺少的装备。和胳膊部一样，海牛的脚部也是非常基础的设计，但在腿肚部分增加了游标尺，主要是融入RX-78的设计方案的机构。不仅是适用于无重量空间，还提高机体的机动性能。特别安装的浮游飞翅炮能根据战况的频繁移动惯性重心，这就是因为其装有多个高输出推进器。当然，浮游飞翅炮和装在背部的火神炮也能自重相抵，并充分发挥机动性能。为此，海牛除了增加二基推进器装备型的螺旋桨推进器、弹仓和浮游飞翅炮，还安装三基对称的配置，并独自开发此重心移动的程序。也就是说，对应浮游飞翅炮的开动状况，海牛的腿部是控制各部瞬间发生的情况的重要部件，其迅速反应被誉为和人类一样的反应速度。特别是安装精神感应骨架后，在接近战斗时，能使用腿部特技进行踢脚打击。

MS leg for space fighting,the basal function of it is large rocket anchor launcher.IT is used in attack and defend beachhead or landing task,it use to land on mothership.And it is indispensable equipment as a walking-use leg.As arm unit,the leg unit of Hi-Nu is very basal design,but add vernier in midleg,it is a structure that absorb the design idea of RX-78.

Not onky suitalbe for weightkess space,it can also improve the mobile ability of MS.The specil-mounted fin funnel can move the inertial barycenter hourly base on the battle situations,because it equiped with several high output thruster.Of course,fin funel and fire-fiend gun mounted on back can counteract deadweight each other and exert the mobile ability fully,So,Hi-Nu except equiped airscrew thruster of twain-radix mode thruster,magazine and fin funnel,it equiped three-radix symmetrical equipment and impolder program for moving barycenter itself.That mean according to the status of fin funnel,the leg unit of Hi-Nu is a very important part to control gusty situations of other parts.The quickly reaction of it is praised as the reaction speed of human.Especially after mounte the pyscoframe,it can use feet stunt to attack adversary in close combat.

8 9 10 腿部〔LEG UNIT〕

组装8 9 10使用的配件 Parts to assemble8 9 10

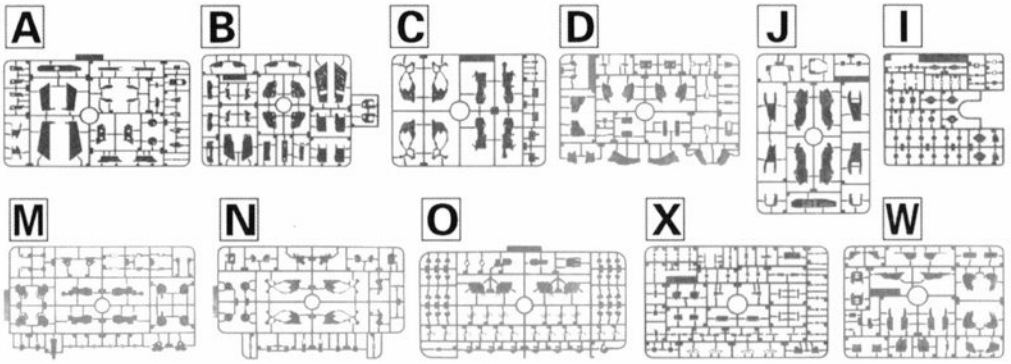

8〈1〉〔脚部的组装〕ASSEMBLE LEG UNIT

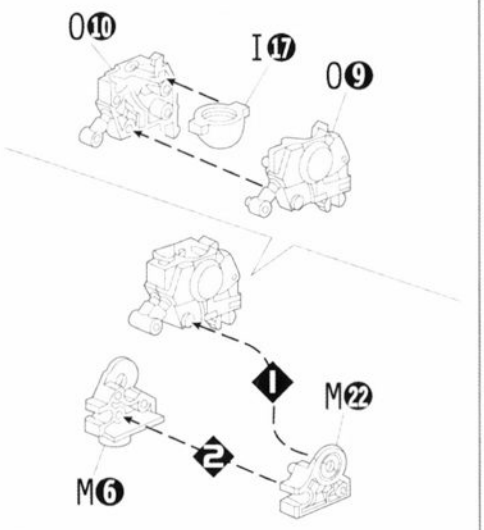

8〈2〉

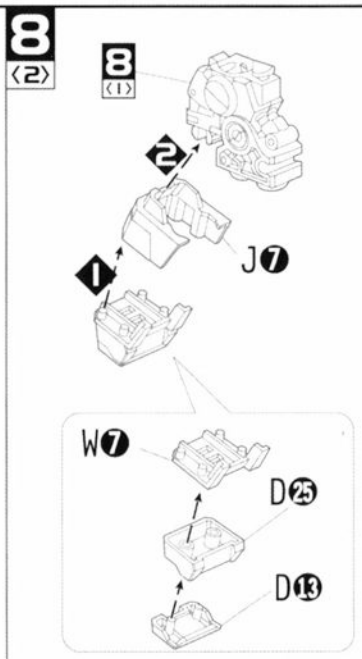

8〈3〉

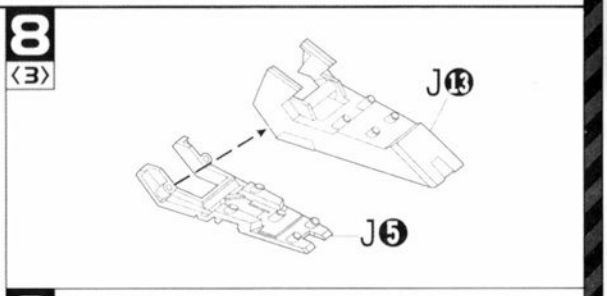

8〈4〉

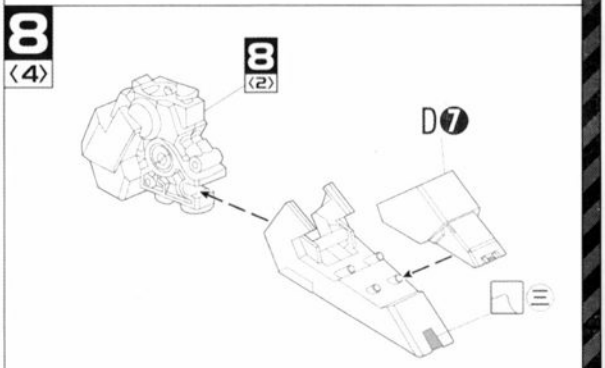

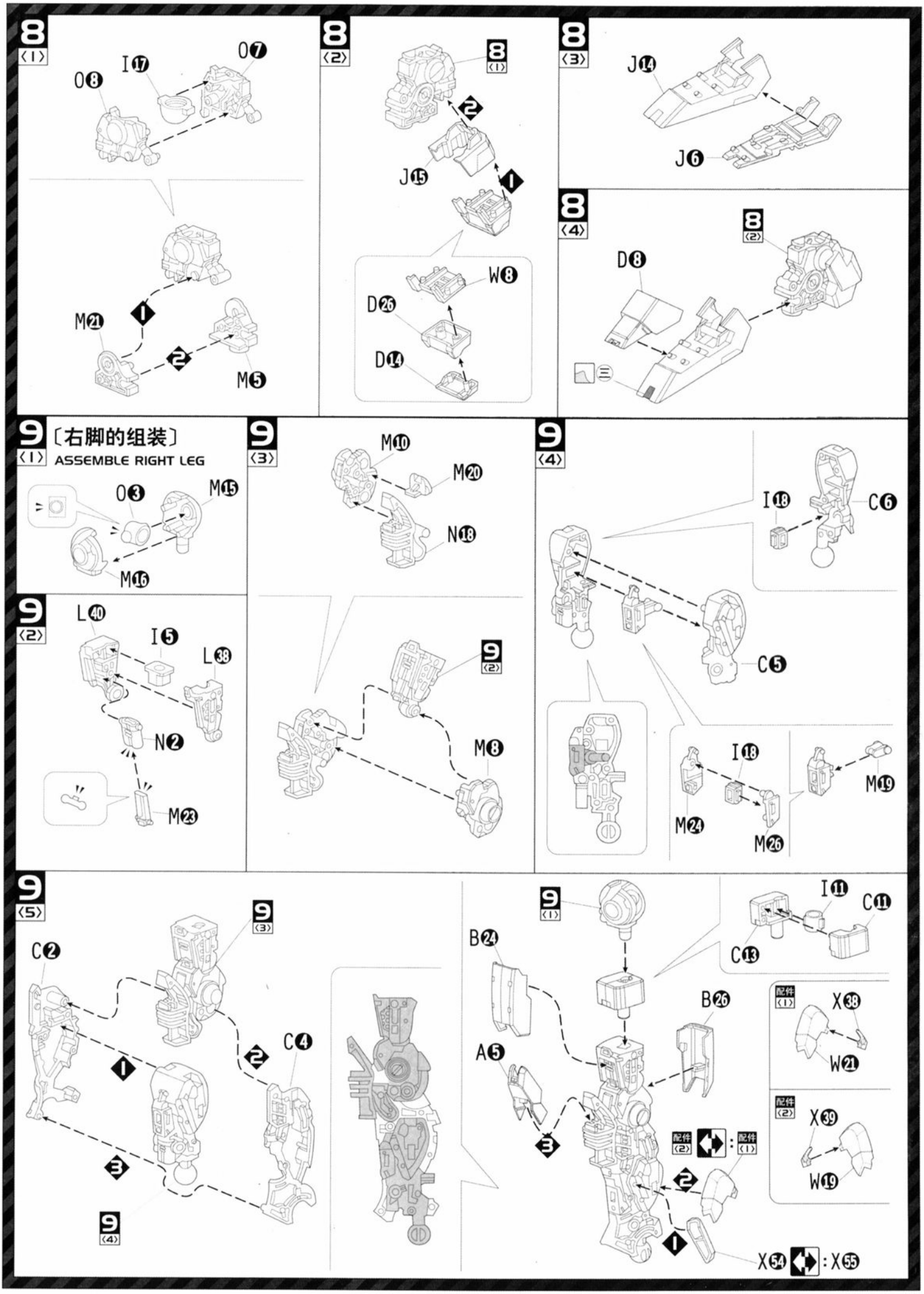
8 〈1〉
O⑧
I⑰
O⑦
M㉑
M⑤
8 〈2〉
8 〈1〉
J⑮
W⑧
D㉖
D⑭
8 〈3〉
J⑭
J⑥
8 〈4〉
8 〈2〉
D⑧
9 〈1〉〔右脚的组装〕
ASSEMBLE RIGHT LEG
O③
M⑮
M⑯
9 〈2〉
L㊵
I⑤
L㊳
N②
M㉓
9 〈3〉
M⑩
M⑳
N⑱
9 〈2〉
M⑧
9 〈4〉
I⑱
C⑥
C⑤
I⑱
M㉔
M㉖
M⑲
9 〈5〉
9 〈3〉
C②
C④
9 〈4〉
9 〈1〉
B㉔
B㉖
A⑤
I⑪
C⑪
C⑬
配件〈1〉
X㊳
W㉑
配件〈2〉
X㊴
W⑲
配件〈2〉 : 配件〈1〉
X㊹ : X㊺

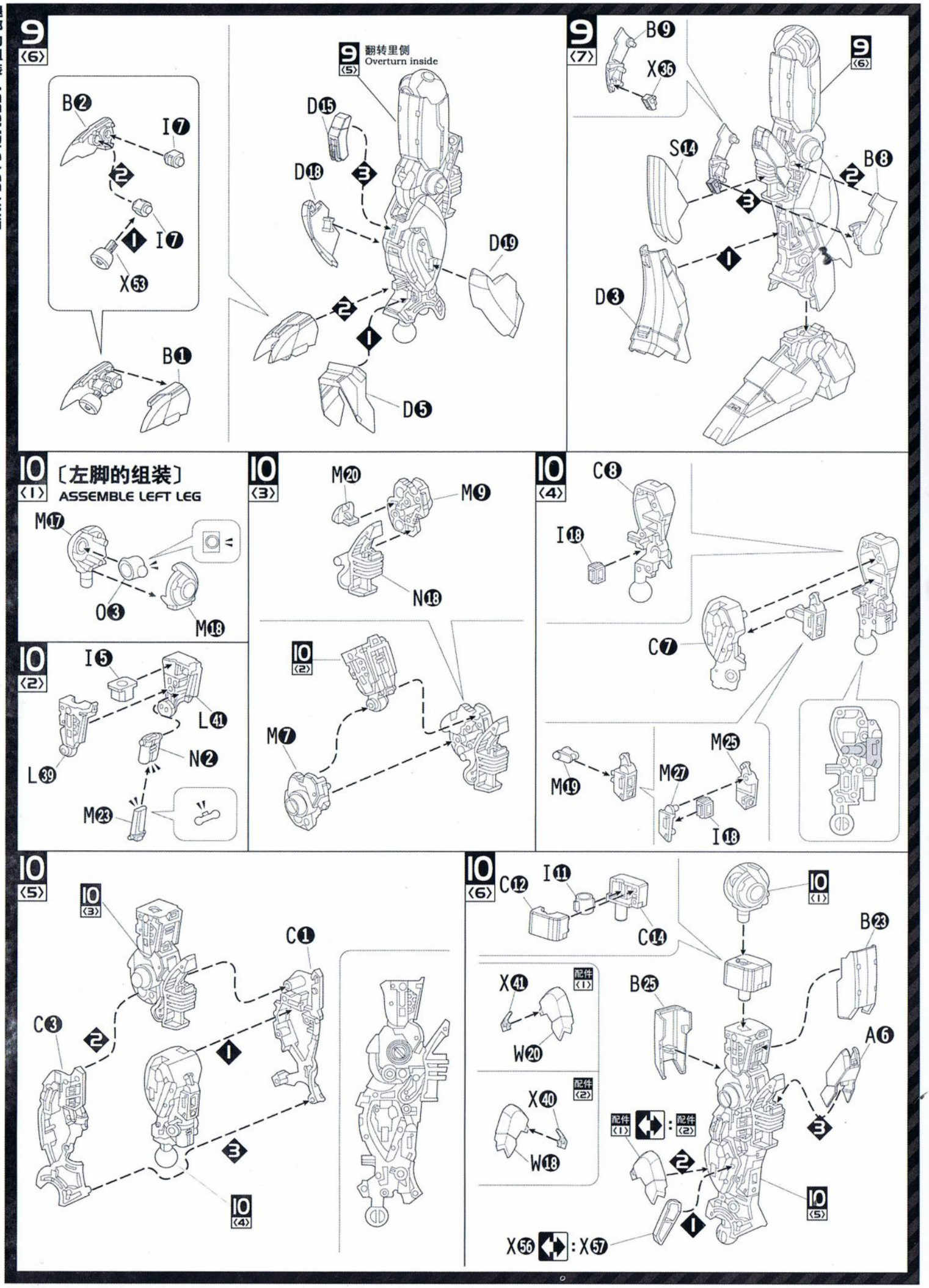
9 〈6〉
B❷
I❼
I❼
X⑤③
B❶
9 〈5〉 翻转里侧 Overturn inside
D⑮
D⑱
D⑲
D❺
9 〈7〉
B❾
X㊱
S⑭
B❽
D❸
10 〈1〉 〔左脚的组装〕 ASSEMBLE LEFT LEG
M⑰
O❸
M⑱
10 〈2〉
I❺
L㊶
L㊴
N❷
M㉓
10 〈3〉
M⑳
M❾
N⑱
M❼
10 〈4〉
C❽
I⑱
C❼
M⑲
M㉕
M㉗
I⑱
10 〈5〉
10 〈3〉
C❶
C❸
10 〈4〉
10 〈6〉
C⑫
I⑪
C⑭
10 〈1〉
B㉓
X㊶
配件〈1〉
W⑳
B㉕
A❻
X㊵
配件〈2〉
W⑱
配件〈1〉 : 配件〈2〉
10 〈5〉
X㊺ : X㊼

PAINTING

颜色搭配比例为参考值，图片和颜色配比后的色彩可能会有些不同。
The color only for references,color of pocture may vary from true color match according to color guide.

更仿真的颜色请参照如下基本配色。
喷漆时最好使用安全带“水性涂料”。

More natural color according to basic color as below.
It is the best “water-dope” for safety.

海牛Hi-Nu

- 主体白色部的喷漆色 Spray-paint color of body white part 白色White(100%) +深蓝色Navy(少量 A little)
- 胸部等蔚蓝色部喷漆色 Spray-paint color of chest blue part 钴蓝色Cobalt blue(55%)+白色White(35%)+浅蓝色Cambridge blue(10%)
- 腹部等银色部喷漆色 Spray-paint color of belly silver part 银色 Silver (100%)
- 后头部感应器Inductor on head back. 黄绿色部的喷漆色 Spray-paint color of yellow green 黄绿色 Yellow green(100%)
- 微调喷管部、枪部喷漆色 Spray-paint color of vernier nozzle and gun part 黑铁色 Black iron (75%) +黑色Black(15%)+银色Silver(10%)
- 眼睛Eyes 亮橙色部的喷漆色 Spray-paint color of light orange part 亮绿色 Light green(100%)
- 额部感应器 Foreead inductor 亮绿色 Light green(100%)

阿姆罗・雷Amuro・Ray

- 标准套装Standard suit 白色部喷漆色 Spray-paint color of white part 白色white（100%）
- 标准套装Standard suit 服饰橙色部喷漆色 Spray-paint color of finery orange part 橙色orange(100%)
- 标准套装Standard suit 军服蓝色部喷漆色 Spray-paint color of military dress blue part 深蓝色Navy(100%)
- 标准套装Standard suit 军服红色部喷漆色 Spray-paint color of military dress red part 深红色Red black(100%)
- 军服Military dress 黄色部喷漆色 Spray-paint color of yellow part 黄色yellow(100%)
- 军服Military dress 白色部的喷漆Spray-paint color of white part 白色White (95%) +黑色Black(5%)
- 脸等肤色部队喷漆色 Spray-paint color of face complexion part 肤色 Complexion(100%)
- 头发Hair 棕色部队喷漆色 Spray-paint color of brown part 红黑色Red black(100%)

重点步骤KEY PROCESS

试着用墨！！ Try to use ink!!

使用色笔/墨（另购）等，在缝隙处勾画线，使模型看起来更紧凑。
Use color pen/ink(addition purchase)to draw kine on aperture to make the model seem more compacter.

着色前[Before]

着色后[After]

和翼一样的可动浮游飞翅炮弹基部，拥有前后、上下可动范围的肩膀，再加上身体内的上体翻转的可动动作等，故能展示动态的行动姿态。
The bottom of fin funnel is movable like wing Shoulder can move front and back\up and down,and movable actions of upper body's inside,it can display the dynamic mobile shaps.

驾驶船升降口从脖子后面打开，并配套标准服装姿态和军服的技师阿姆罗・雷。
Cockpit hatch can open from back side neck,the pilot Amuro・Ray with standard suit and Military dress are included.

小腿前部装甲通过转动式露出内部结构，以展示机动效果。脚脖子上的推动器、板块、脚里的着陆齿轮都是可转动式。
The crus foreside armor can show up inner structure by movable mode to display the mobile effect.The thruster and board in ankle,landing gear leg are all movable mode.

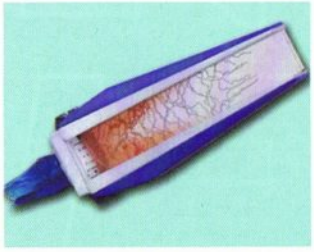

以微米为单位的加工模具技术，额头的型式编号通过细微的零件表现。
The precision of mould-machining technic is micron size,the model No.on forehead is show by hairlike cast.

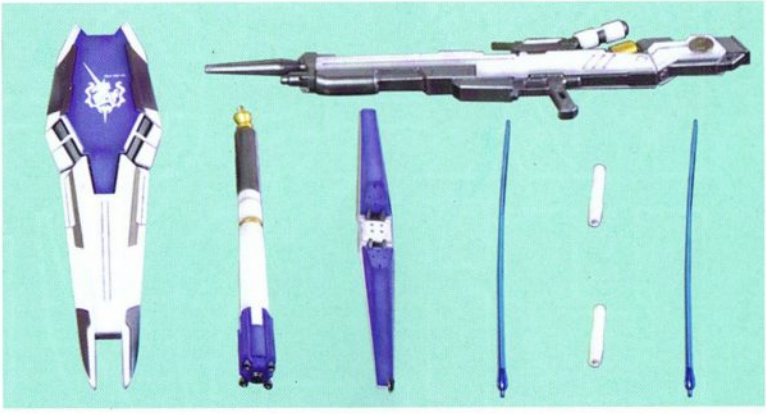

浮游飞翅炮可通过具有攻击感的折叠新机构变形成攻击形态。如光鲜艳的光束、效果配件，使用闪亮配件标准喷嘴的喷射火炎，以便展示攻击形态。基部使用电镀处理，还安装拆装式的弹仓新高级火箭炮。
Fin funnel can transform to attack shape by new folding structure with attack-feeling.Vivid beam and effect part,standard muzzle of twinking part to spray fire,all these are used to display attacking shape.The bottom of it is electroplated,and assemble removable magazine new rocket cannon.

图片的成品已喷漆。图片、插图和实样产品可能有些不同，请谅解。The merchandisse in picture has beem paintde.Illustrations and pictures may vary from the true merchandise.

◎包装上图片、插图和实样产品可能会有所不同，请谅解。Illustration and picture on package may vary from actual merchandise

n actual merchandise.

GRANADA VS VON BRAWN

“有没有带来飞翅炮”，“还没实验呢”。访问过旗舰拉格林姆的AE（阿纳海姆电子）公司的技师奥克拖巴对贝尔多基卡说明事情的紧迫性。“海牛固定放在这里”，按阿姆罗指示，并从阿斯特纳杰ASTONAIG听取到脑波传动系统的奥克拖巴说道。“有吗？”“AE公司制作的？”奥克拖巴不断解释月面里侧的格兰纳达GRANADA和表侧的冯布朗说不同等公司。为了引起兴趣，立刻对机体和脑波传动系统进行解说。阿姆罗看了这些，增强了信心，也更安心。结果海牛没有被延误，并由奥克拖巴和阿姆罗对其进行改装。

“Are you bring fin funnel?” “It is still without test.” AE industry's technician Oktorba who has visited the Ra · Kailum mothership explain the emergency to Beltorchika. “Hi–Nu will place here” say Oktorba ,according to the order of Amuro,and heard the brainwave transmission system form Astonaige. “Have they?” “Does AE industry make it ?” Oktorba explain that Granada inside the Moon surface and Von · Brawn outside the Moon surface are different Co..To get interesting ,he show the mechanism and brainwave transmission system.Amuro see all these,he get confidence and become ease.As the result,Hi–Nu did not be delayed,and it is refited by Okterba and Amuro.

AH...?AM LOOKING AT THE WORLD!?

已分裂成两半的小行星“阿克西斯”，前方的巨大碎片中核爆炸下更加是支离破碎！海牛在这里转动，“是让其减速，还是让其转换方向，你也来帮忙！”阿姆罗好像在教训一样。刚一说完，夏亚乘驶的夜莺密封船就攻想阿克西斯的表面。

“啊...！”密封船的紧急出口等已经不能转动。夏亚以必死之心抱住调节杆。“不，搞错啦，让我算算，稍后让海牛落入地球！”。于是，海牛的尾部、前部好像超负荷一样全打开。“阿姆罗，你在干什么？”“只要有把握，什么都可以做！”“因为战争，我们已让整个宇宙蒙上灰尘！”阿姆罗撕心裂肺的叫道。以海牛为中心的白色光被吸入地球发出的光！“啊”，我看到了整个世界...!

Little planet AXIS has broken to two part ,and the hugeness fragment in front of it has broken up in nucleus blas!Hi–Nu is moving over here,"We should decelerte or change direction, you must go to help!"said Amuor like teaching.Just a moment after he said,Philomela airproof cabin pilot by Shaa attack to the surface of AXIS. "Ah...!" the exit of airproof cabin can not move.Shaa clasped adjust–pole by desperate courage. "No,it wrong,let me calculate,Hi–Nuwill fall into the Earth later on !" And then the teil and foreside of Hi–Nuopen fully like overload. "Amuro,what are you doing?" "If condition in control,you can do anything you want!" "Because of war,we can cover all universe with dust!" Amuro shout grievedly.

PYRAMID OF LIGHT

“必须阻止阿克西斯的落下！”，阿姆罗大尉直接连接旗舰拉格林姆，并通过米加粒子炮狙击阿克西斯的核脉冲发动机。另一方面，奎丝·帕拉丝的a·亚索龙对其紧追不舍。“如是奎丝请停止”“那样将会使大尉为难”。了解奎丝意图的阿姆罗，收敛了5支浮游飞翅炮弹移动，并让已扩散的光束互相干扰。奎丝认为阿姆罗收起飞翅炮弹举动是笨蛋的行为，于是，奎丝利用头部的米加粒子炮如披刀横砍般扫射宇宙。“一切都失常了”，在一瞬间，凶暴之光好像已经捕获到海牛。但是，海牛却处于四周粒子扩散的金字塔形状的光之幕中。“真是令人讨厌”，奎丝无法理解海牛为何损伤。

"We must stop the falling of AXIS!" ,senior captain Amuro call admiral RA · KAILUM directly,and snipe the nucleus–pulse enginc of AXIS by Maga particle cannon.Onthe other sccne, Quess Paraya's a · Azieru go close after him. "If you are Quess,please shop" "that will baffle senior captain" .Amuro understand the intent of Quess;he furl moving of Amuro is very stupid,she mow the universe by her large head particle gun. "She is crazy" ,it seem as terrible beam jet has caught Hi–Nu stand in pyramid–shape beam veil and particle diffusing around it. "Skunk" ,Qucess unable to understand why Hi–Nu is undemaged.

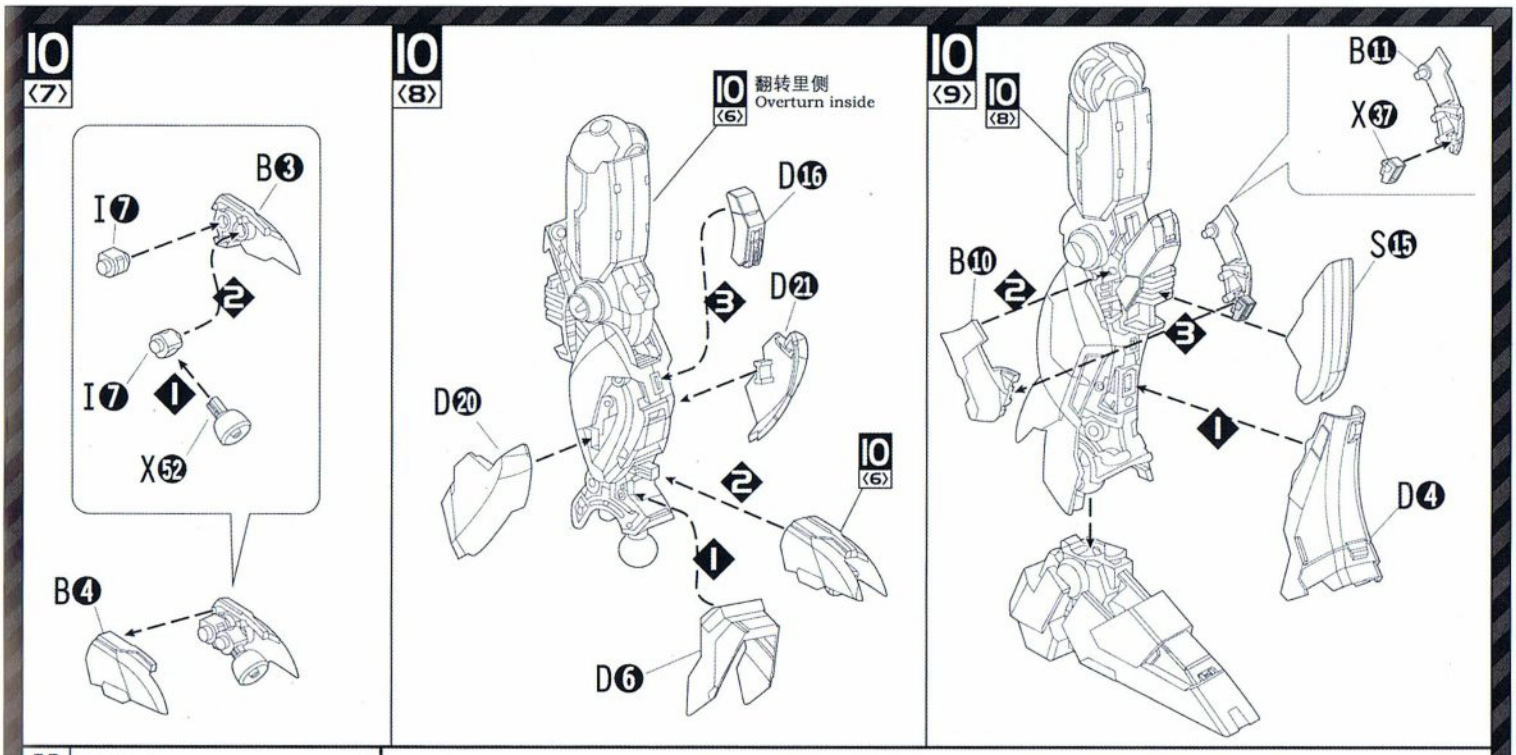

II 腰部〔WAIST UNIT〕

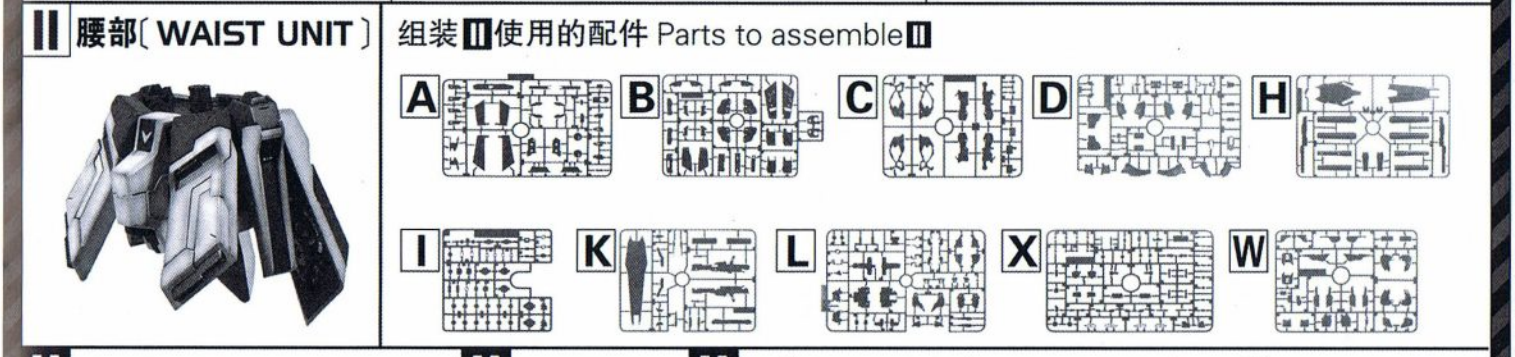

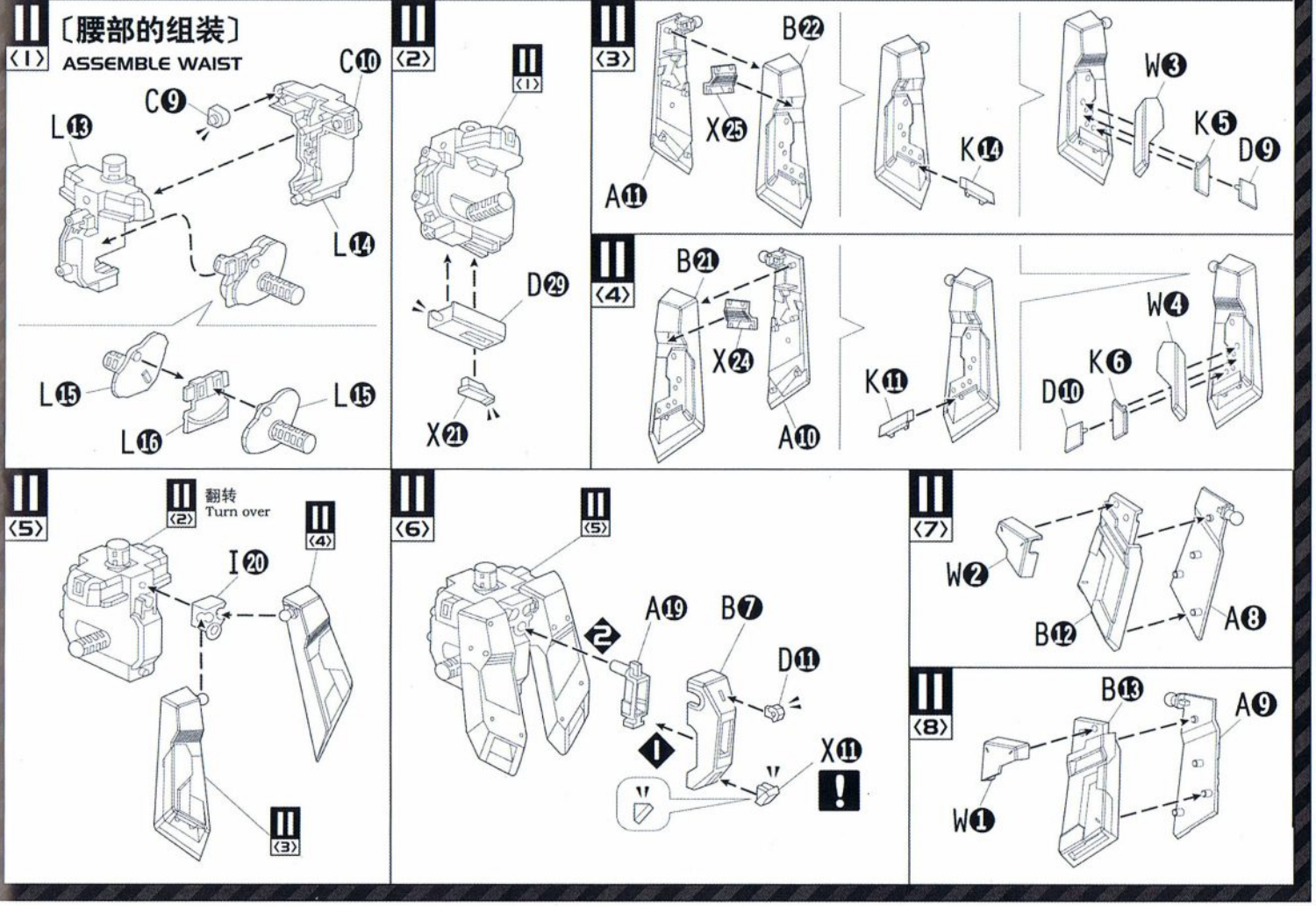

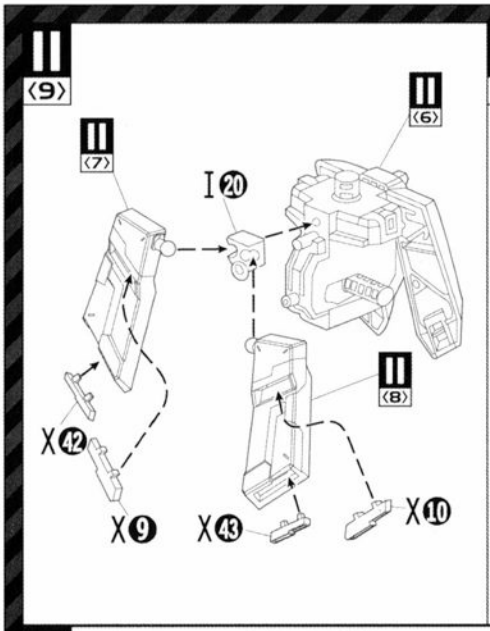

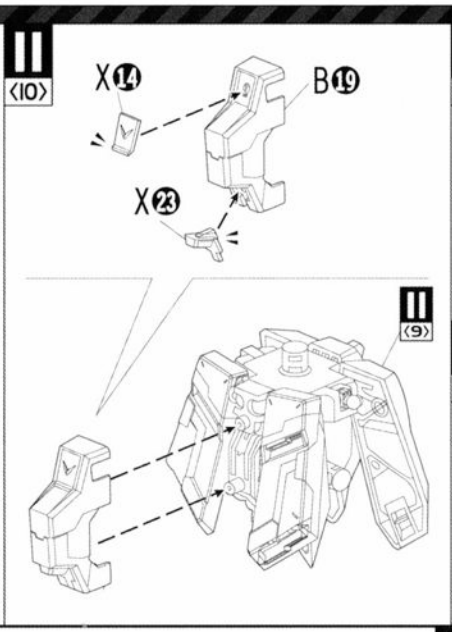

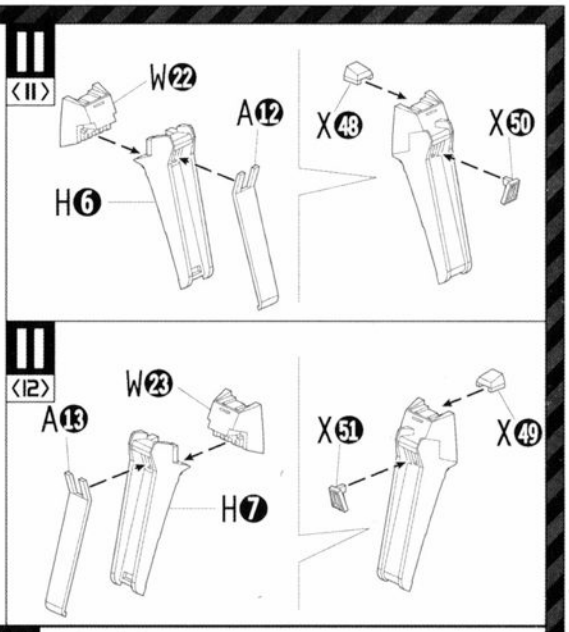

12 〔完成下半身的组装〕FINAL ASSEMBLE LOWER BODY

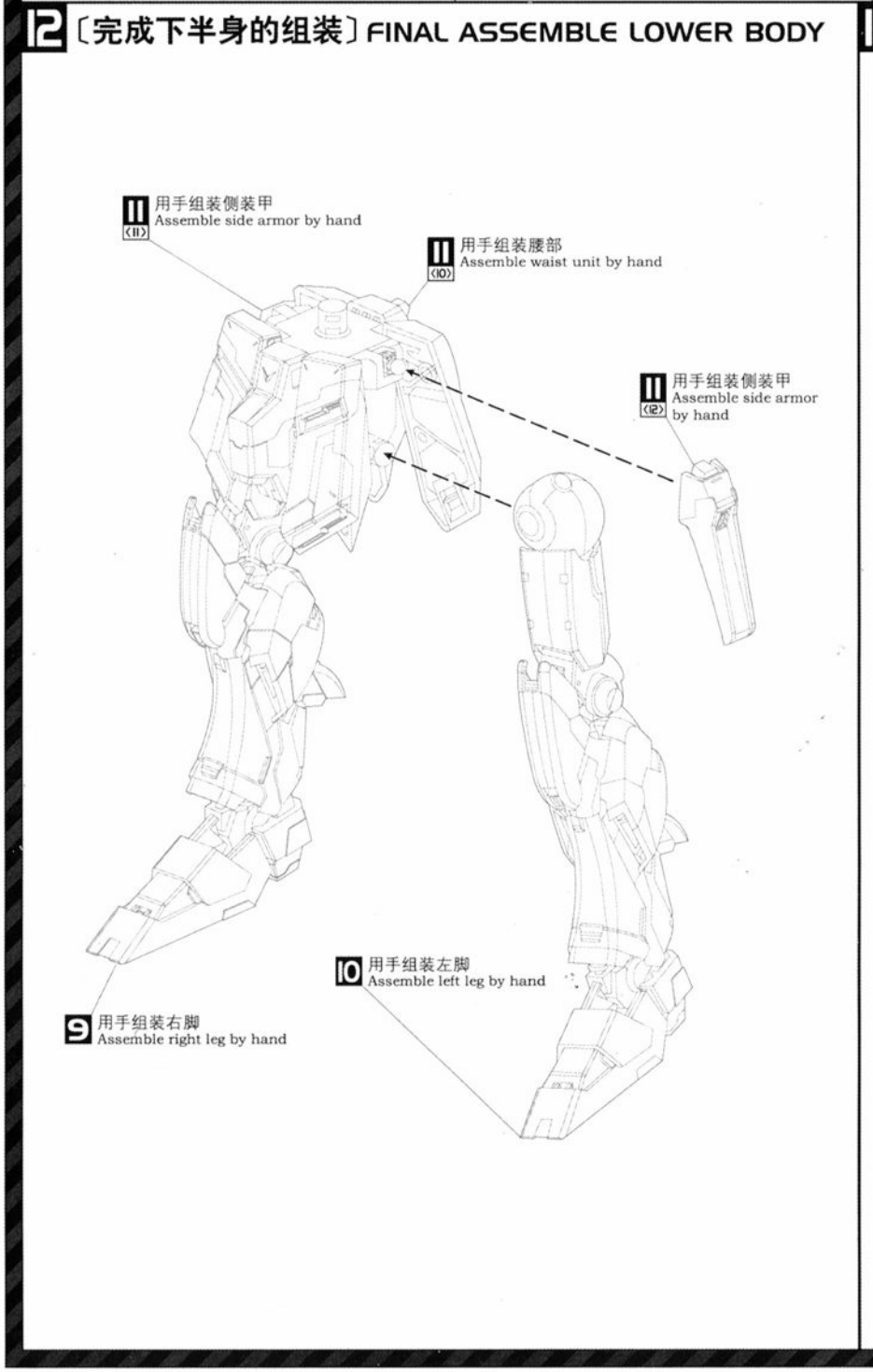

13 〔完成〕FINAL ASSEMBLE

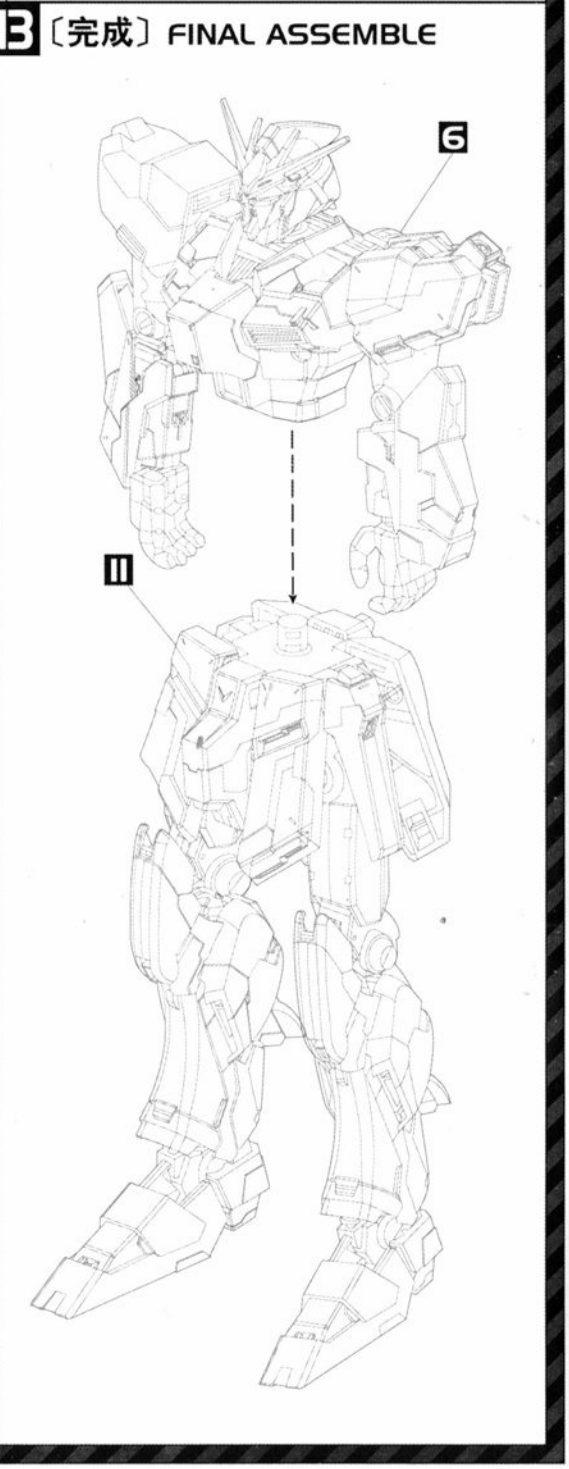

浮游飞翅炮〔FIN FUNNEL〕

安装在海牛的主兵器“浮游飞翅炮”，属于最先出的全方位攻击兵器。MS即使作为单体也能携带的武器，属于屈指可数的攻防一体的武器。

RX-93-V2海牛装备的浮游飞翅炮，开放性的结构内装粒子加速带和小型的发生器，此武器本身能分成三个模块，即AMBAC组件。作为全方位攻击兵器也能和大型的机体相匹配，其机动性、工作效率、实际运转时间远远超过通常的飞翅炮。另外，此兵器的特点是可结合光束防护壁任意展开。米加粒子退缩的必要系统是按照同区域发生器同样的基本原理，故能通过开放型专用。浮游炮的的配置还能任意改变光束防护壁的有效面。很明显，对于光束武器来说是无懈可击。

The main weapon of Hi-Nu name “FIN FUNNEL”,it is one of the earliest all-directions attackong weapon.It is a weapon that MS can take evem in single-form,it is a topest attack and defend in one weapon.

Fin funnel is one weapon of RX-93-V2 Hi-Nu,particle accelcrate-bell and small generator are mounted in opening framework.This weapon can separate into three modules,three are AMBAC module.It is suitable for large-scale MS as a all-directions attacking weapon,the flexibility,work efficiency and actual running time of it are far exceed general funnel.In addition,it can open out freely when link with beam defence wall,that is the specialty of it.The neccessary system to retract maga particle is base on the same theory of area generator,so it can change using by opening mode.The scheme of fin funnel can change the effectual side of beam defence wall freely.If equip with four fin funnels,the mechanism can take complete defence from four directions.Obviously,it is unassailable for beam weapons.In case,when the all-diretion weapon of enemy intervene the area,brainwave transmission soundwave will reflect,the terminal of it will link both pilots and give then physiological hurt.When assemble fin funnel,the first design to saaemble it is that array all terminals on the hexagonal tray of it,the hexagonal rray is uesd as control board or bracket.But then,to keep balance of equipment and easily resupply energy,it use double-board foding mode,and the hanging standard of it is three pieces in one faucet.

14～21 浮游飞翅炮〔FIN FUNNEL〕

组装14～21使用的配件 Parts to assemble 14～21

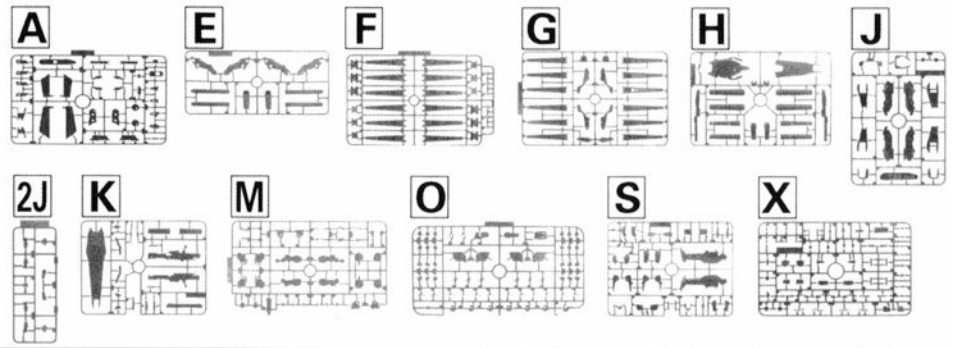

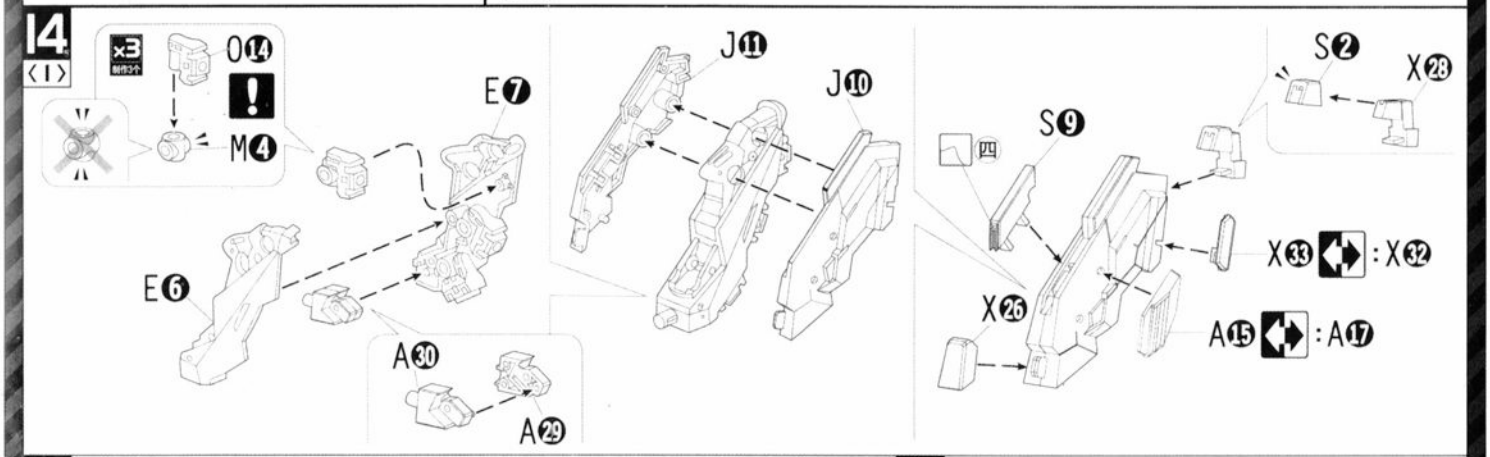

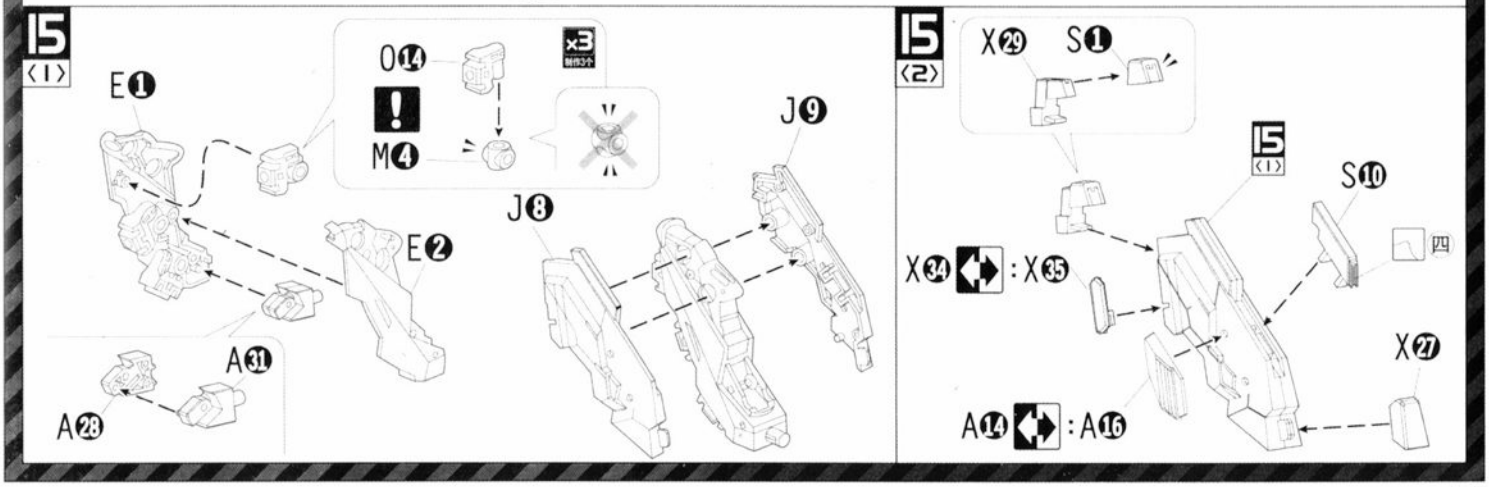

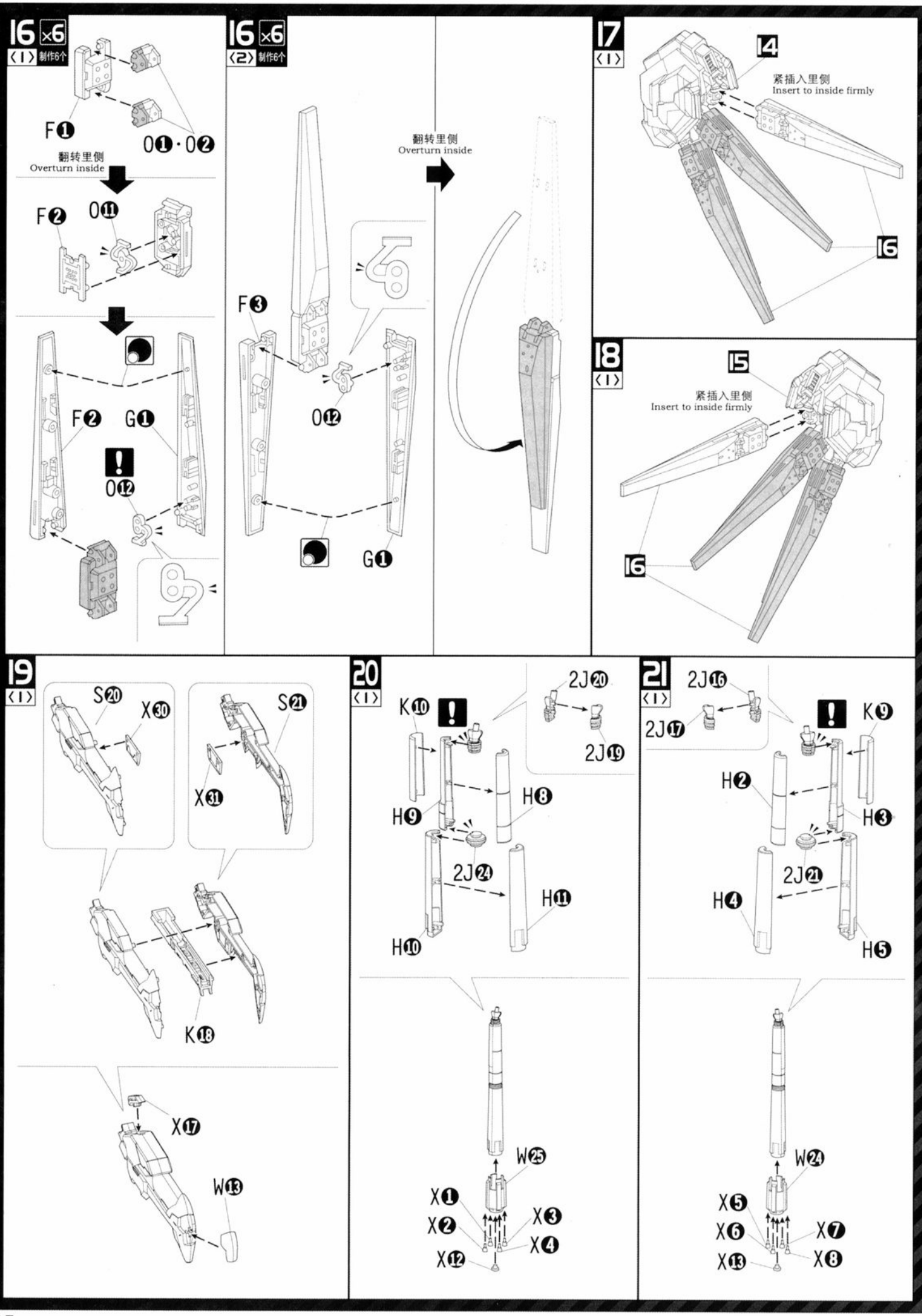
16 ×6
〈1〉制作6个
F❶
O❶·O❷
翻转里侧
Overturn inside
F❷
O⓫
F❷
G❶
!
O⓬
16 ×6
〈2〉制作6个
翻转里侧
Overturn inside
F❸
O⓬
G❶
17
〈1〉
14
紧插入里侧
Insert to inside firmly
16
18
〈1〉
15
紧插入里侧
Insert to inside firmly
16
19
〈1〉
S⓴
X㉚
S㉑
X㉛
K⓲
X⓱
W⓭
20
〈1〉
K❿
!
2J⓴
2J⓳
H❾
H❽
2J㉔
H⓫
H❿
W㉕
X❶
X❷
X❸
X❹
X⓬
21
〈1〉
2J⓰
2J⓱
!
K❾
H❷
H❸
2J㉑
H❹
H❺
W㉔
X❺
X❻
X❼
X❽
X⓭

22〔完成背面的组装〕FINAL ASSEMBLE THE BACK

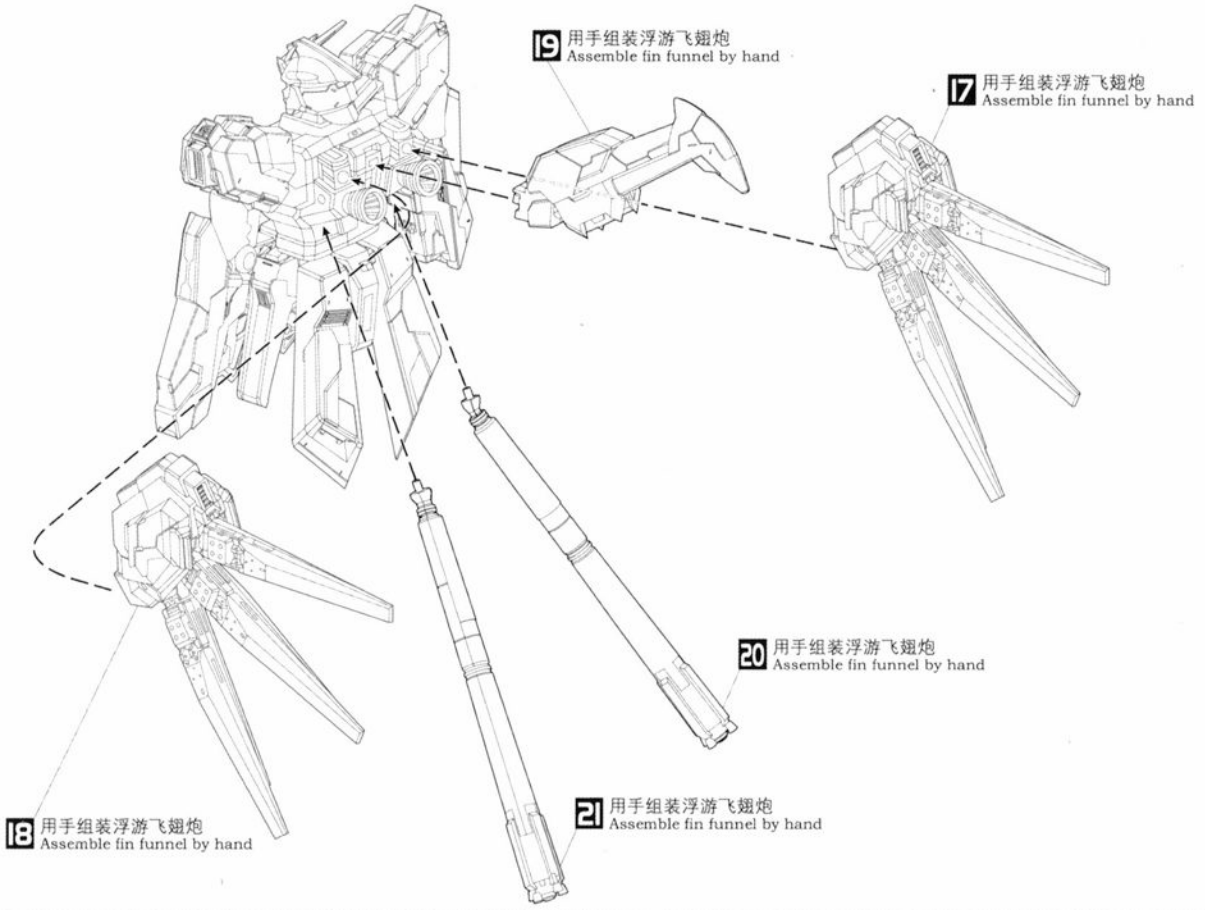

武器〔WEAPONS〕

海牛身上的配备，虽然大多数都是专用和弹头等大多数任属规格品。从另一个方面来说，海牛是仓促制造的机体，反而使海牛得到更多特殊的材料等。

Although almost all equipment of Hi-Nu are special weapons,but the materials and bullet of then are still standard product.In other word,because Hi-Nu is an hurriedly-produce MS,it use more special materials.

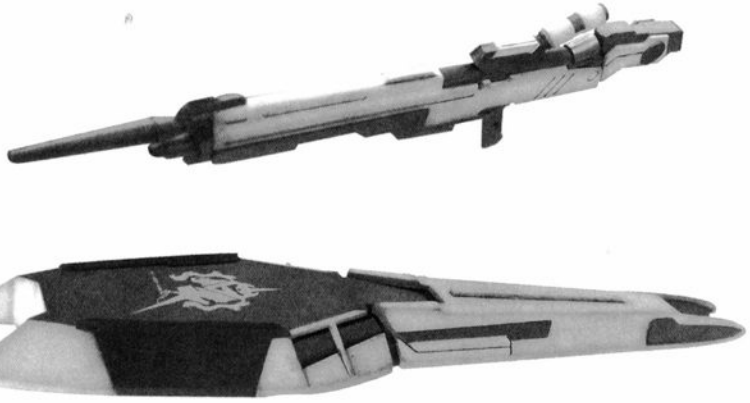

光束步枪【BEAM RIFLE】

压缩光束，以便间歇式发的射出。还能使用于机关枪，拥有与同时期战舰级别主炮相匹敌威力。

Compress beam of light,so that it can shoot intermittently.It can use in machine gun too,the power of it is equal to the main cannon of battleship at the same time.

盾【Shield】

内装光束枪用的发生器的防御装备。此装备的输出功率能同一年战争时的光束步枪相匹敌。

A defence equipment with generator of beam rigle inside.The output power of it is equal to the energy of beam rifle ueing for 1 year.

23 24 25 武器〔WEAPONS〕

组装23 24 25使用的配件 Parts to assemble 23 24 25

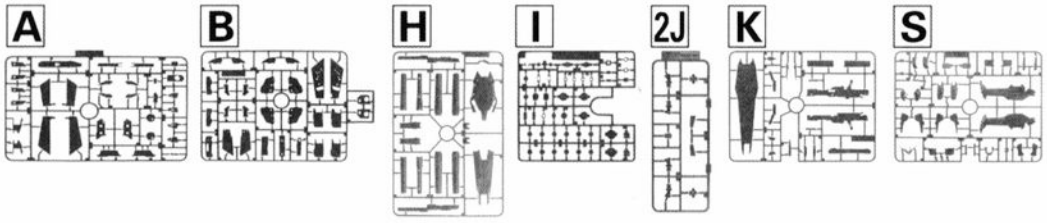

25 〈1〉 〔武器的装备〕 EQUIP WEAPONS

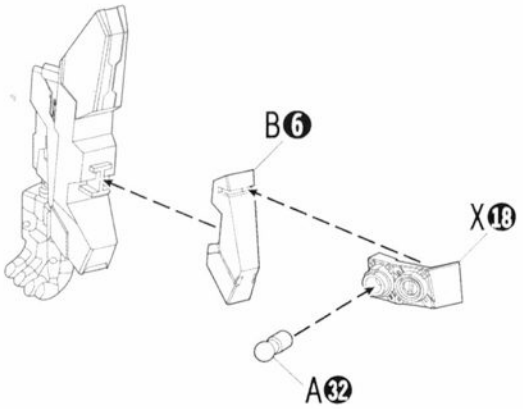

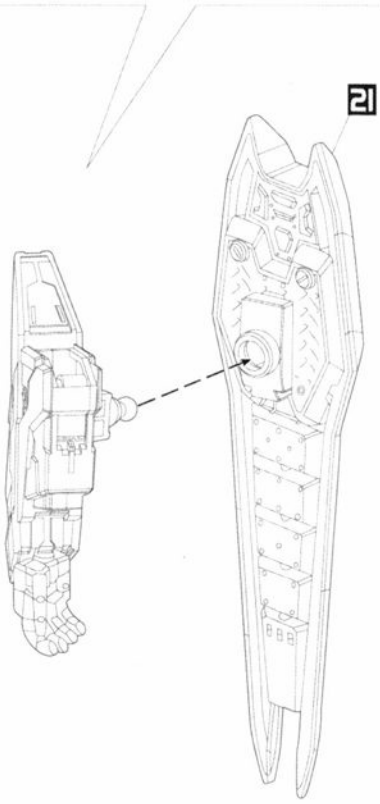

25 〈2〉

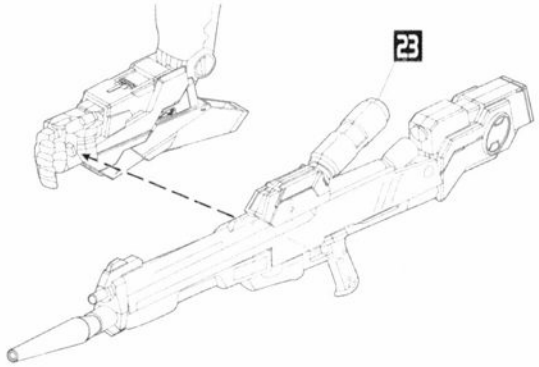

25 〈3〉

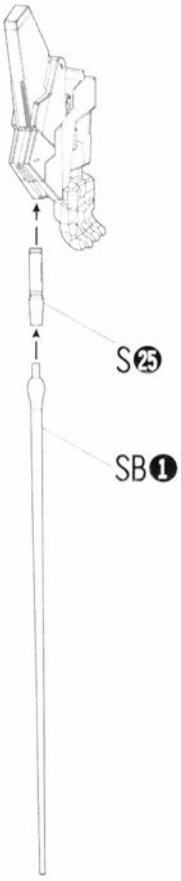

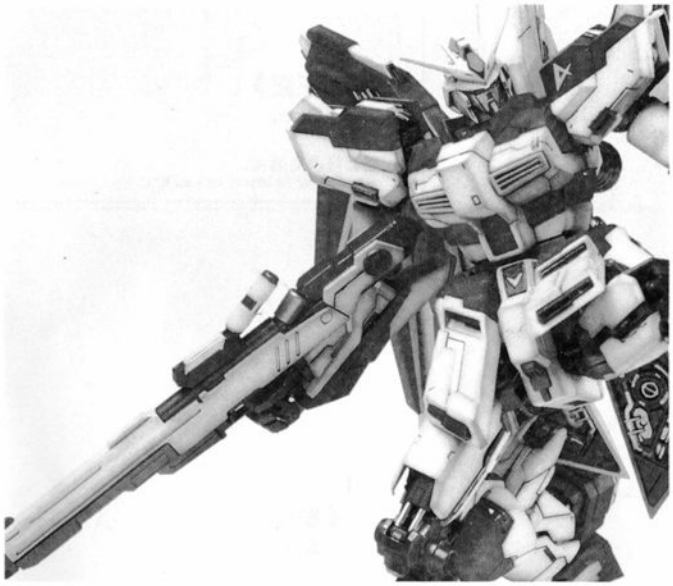

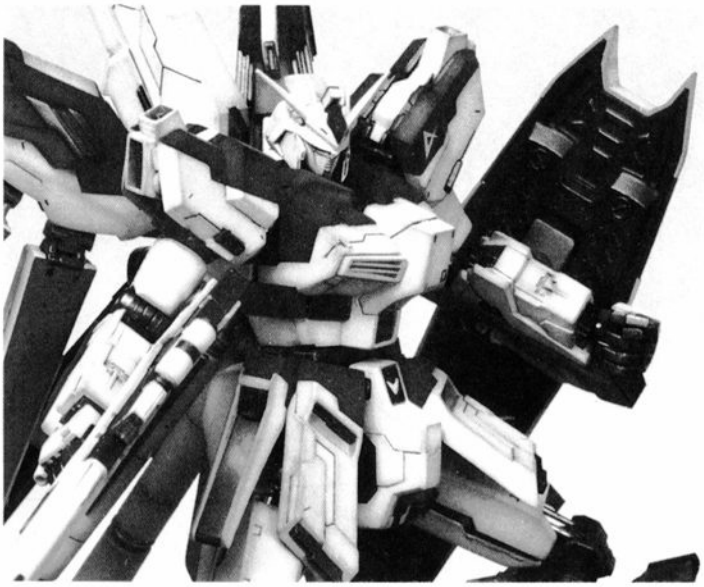

25 〈1〉〔武器的装备〕
EQUIP WEAPONS

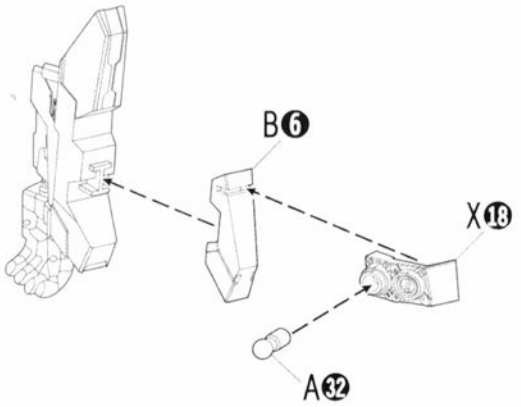

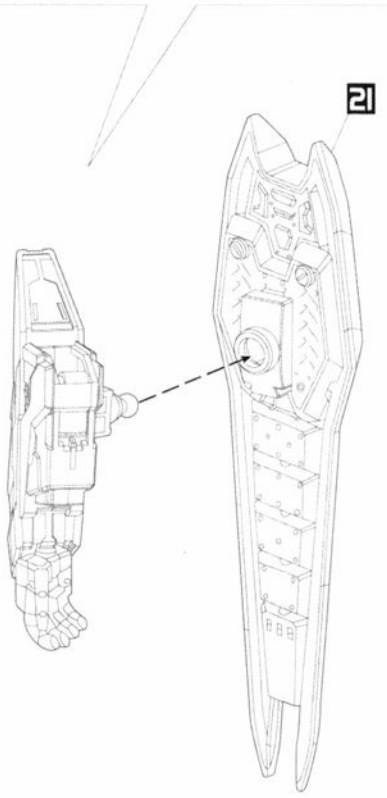

25 〈2〉

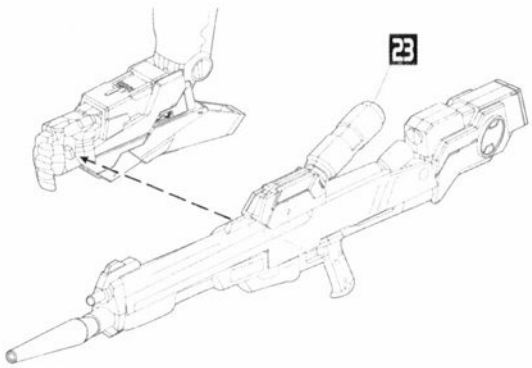

25 〈3〉

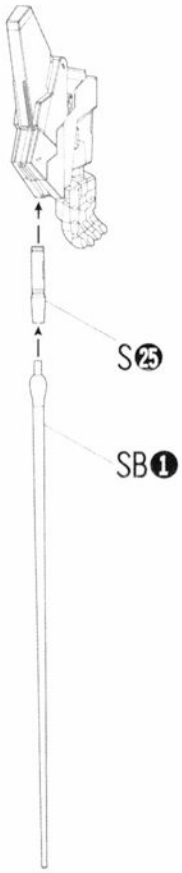

26 27 28 支架
〔DISPLAY STAND〕

组装 26 27 28 使用的配件 Parts to assemble 26 27 28

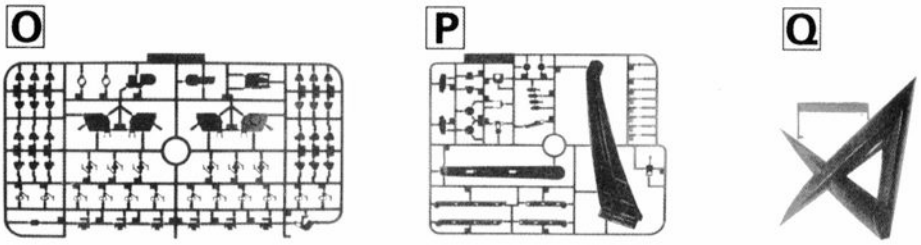

26 〈1〉 〔组装摆设台座〕
ASSEMBLE DISPLAY STAND

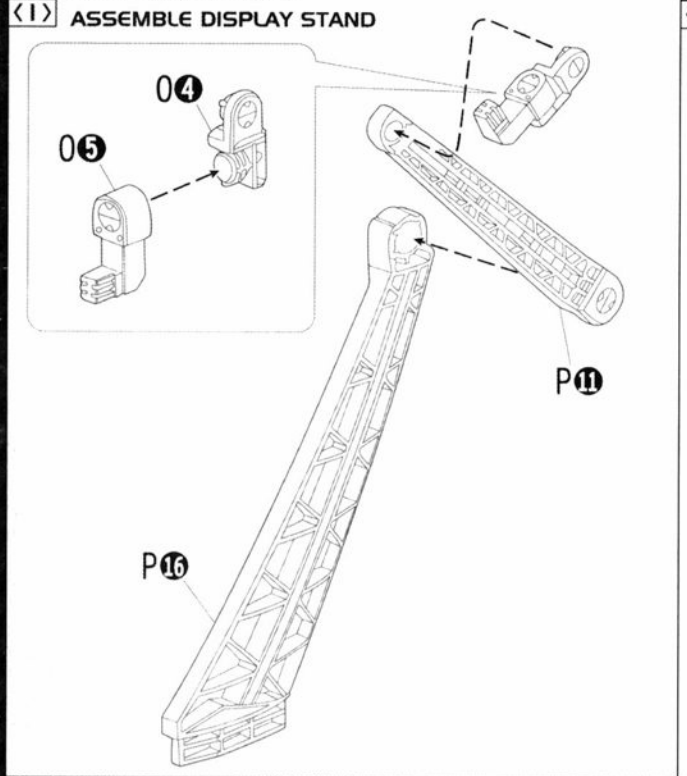

26 〈2〉

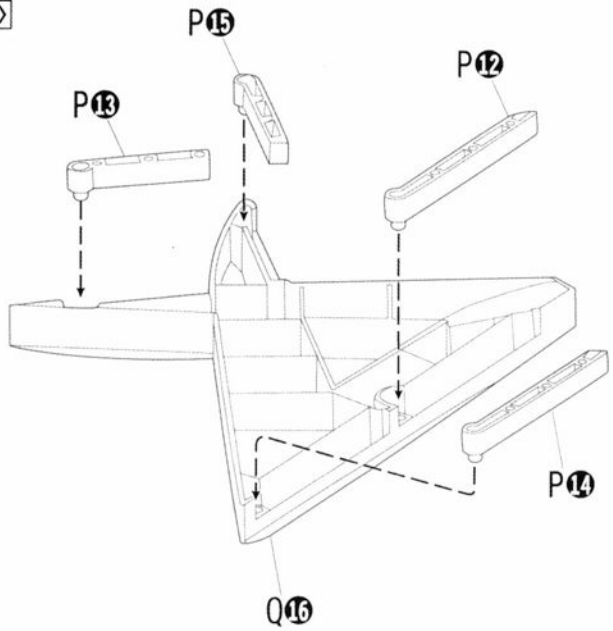

26 〈3〉

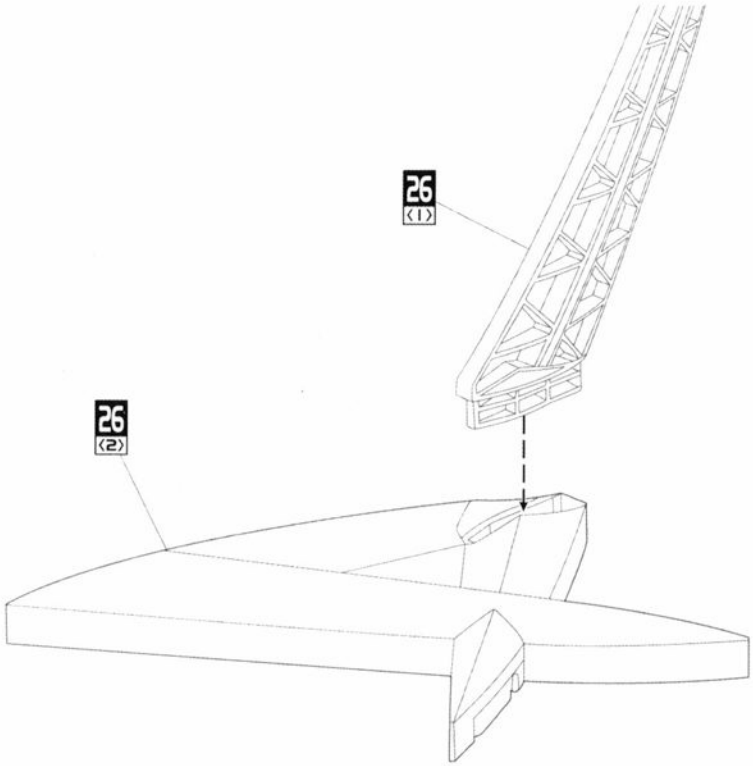

如图，调整台座的高度和角度。
Adjust the height and angle of stand sa figure.

《正面》
Front

可随喜好改变插入。
It can change to insert sa you like.

《侧面》
Side

27

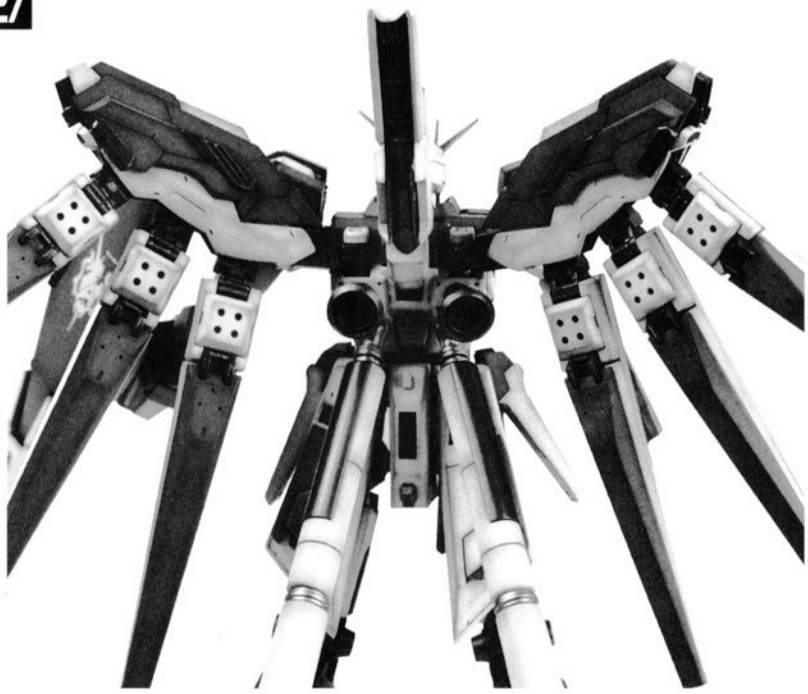

开启浮游炮 Star up fin funnel

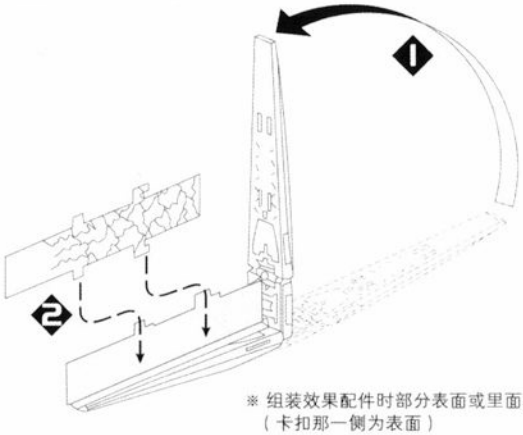

※ 组装效果配件时部分表面或里面。（卡扣那一侧为表面）

※ Outside and inside is mo different when assemble the sffevtive part.
(Side with buckle is the outside)

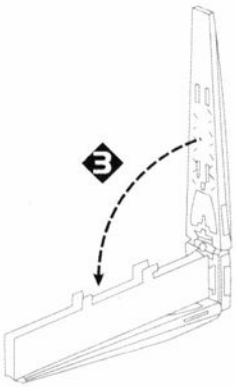

效果配件的使用注意点
Notices of using the effevtive part

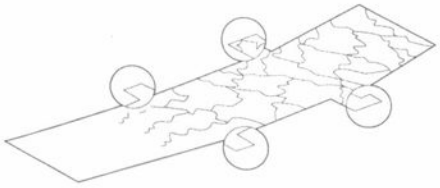

- 表里的区分方法请参考P13的图片。
- 即使稍微反光也请放心使用。但组装时请注意尖锐部分。
- 难以从薄片等拔出时请使用刀子等剪切。◯ 标示的部分比较尖锐。(组装尖锐配件时请十分注意)
- Please reference picture P13 to differentiate the outside and inside.
- Please use it easily even there is a little reflection.Please pay attention to sharp part whe assembling.
- Please use a knife to cut off if it is difficult to draw from slice.Parts with mar㊀are very sharp.(Pay attention when assemble the sharp parts)

将浮游炮摆在底座上组装。（使之弯曲为一例。如下图，用手使之折弯。）
Assemble the fin funnel on display stand.(For example,make it bendt.Bend it by hand sa figure bellow)

28 ×3 〈1〉制作3个 〔软质闪亮棒A〕
SOFT FLASH POLE A

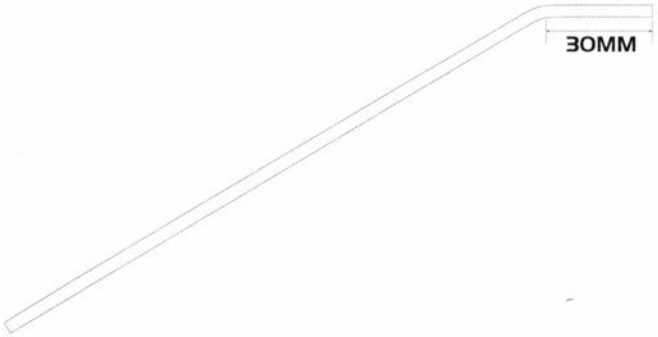

28 ×3 〈2〉制作3个 〔软质闪亮棒B〕
SOFT FLASH POLE B

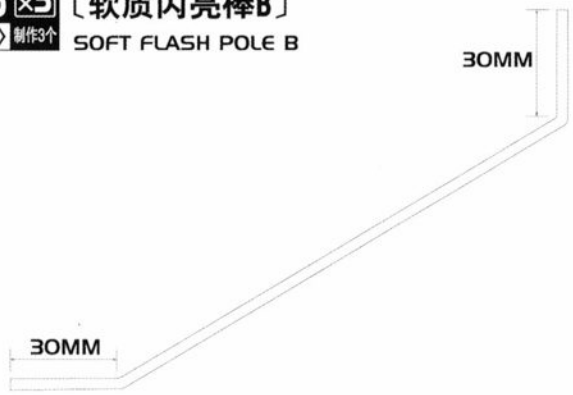

F❹和加配件㉖请结合形状组装。
Please assemble F❹ and ㉖ reference to their form.

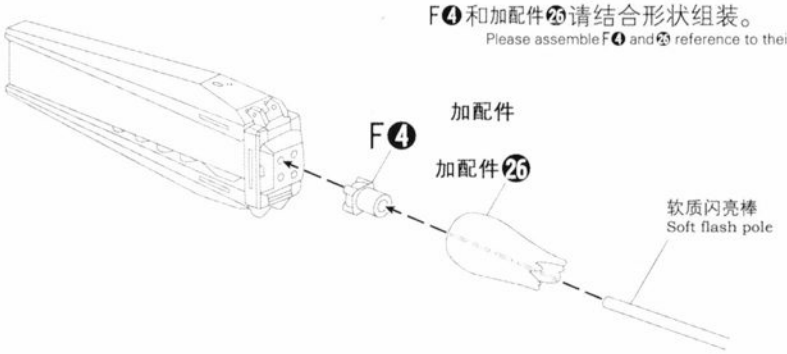

28
〈4〉

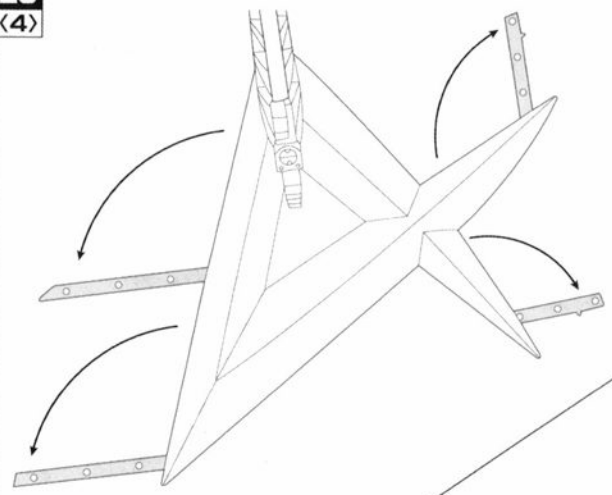

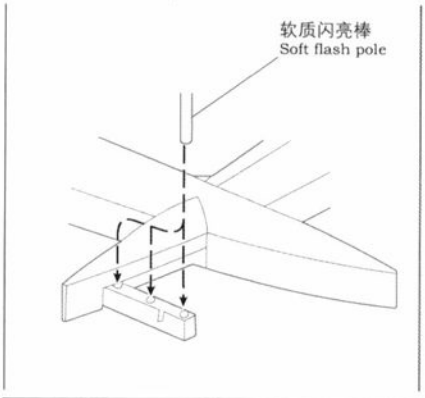

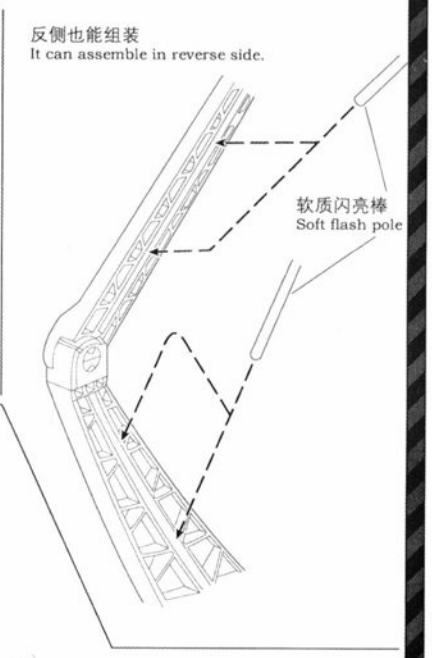

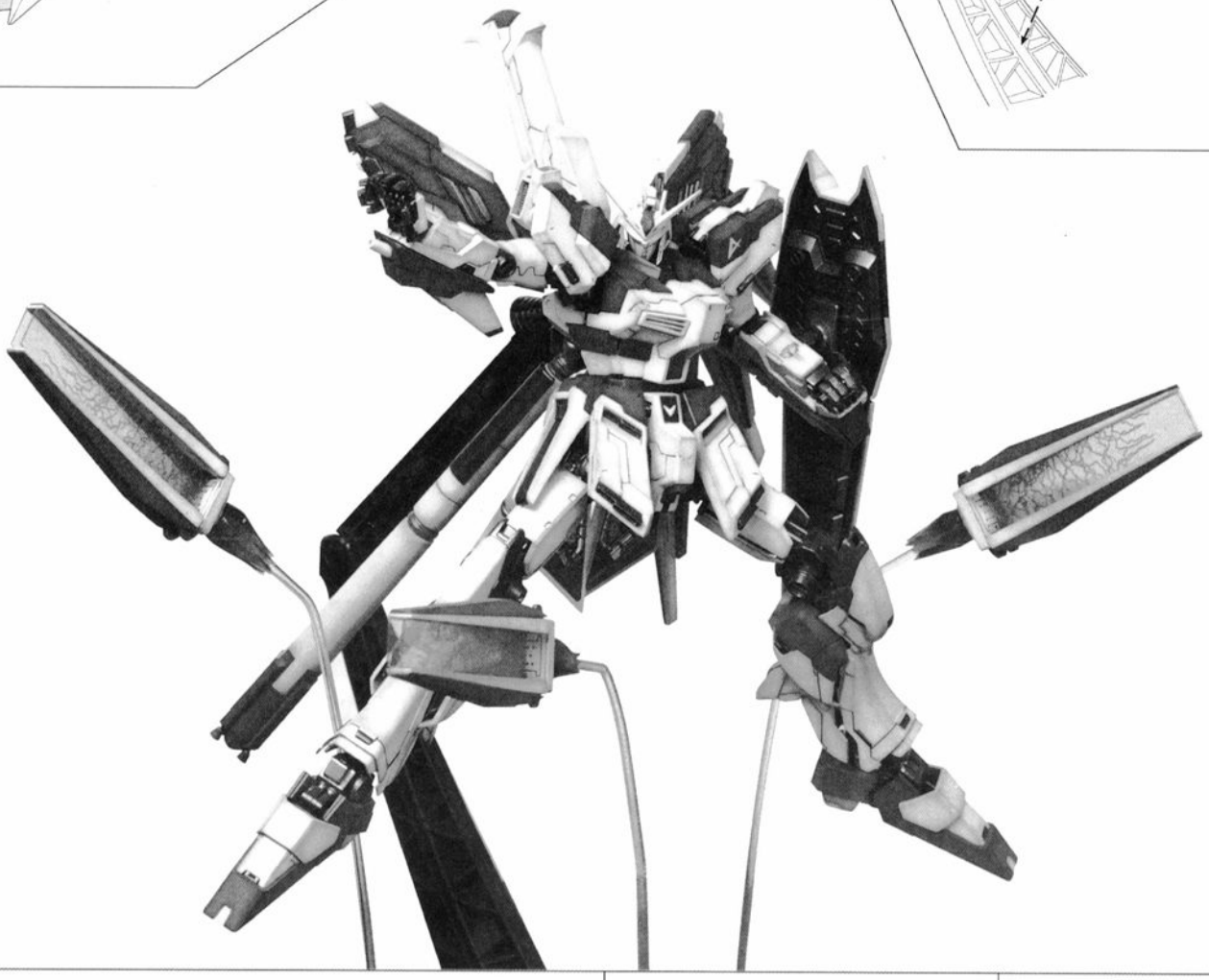

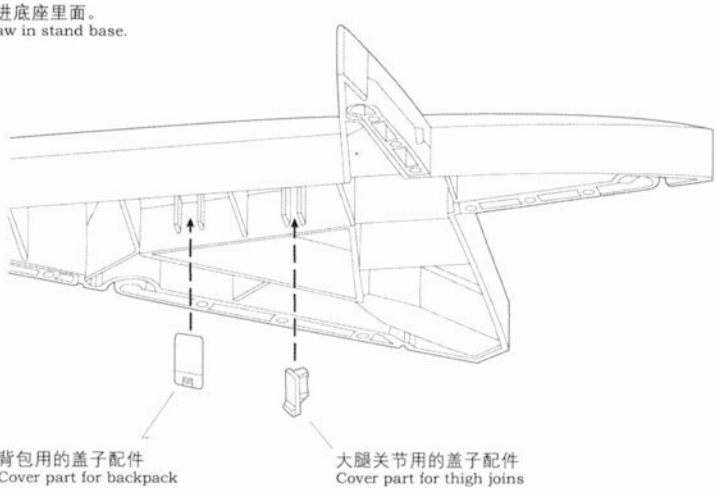

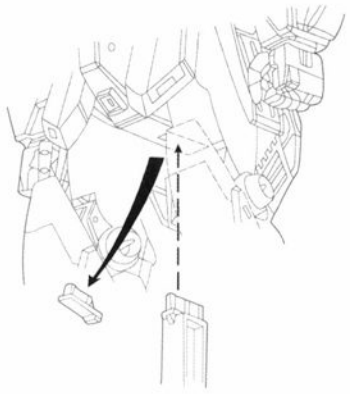

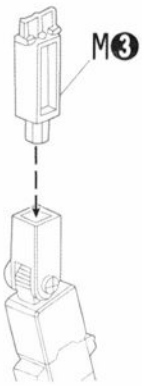

使用M❸需另购行动底座组装。
You need addition purchase action stand to assemble when use M❸

贴纸粘贴参考
Stickers pasted Reference

光束枪

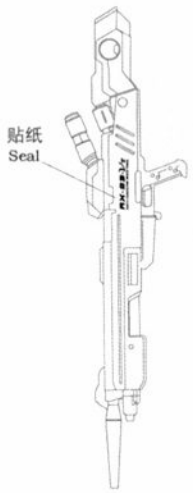

盾

右手臂

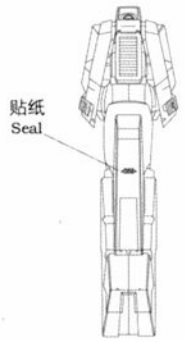

左手臂

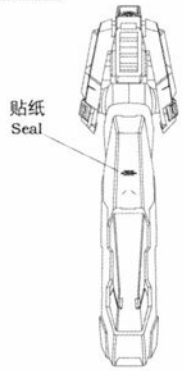

侧面

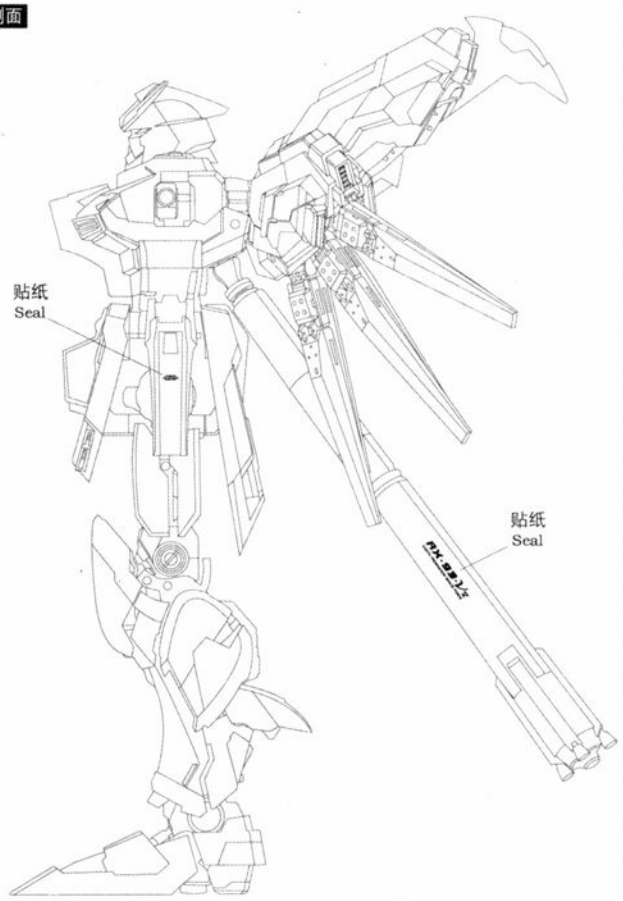

正面

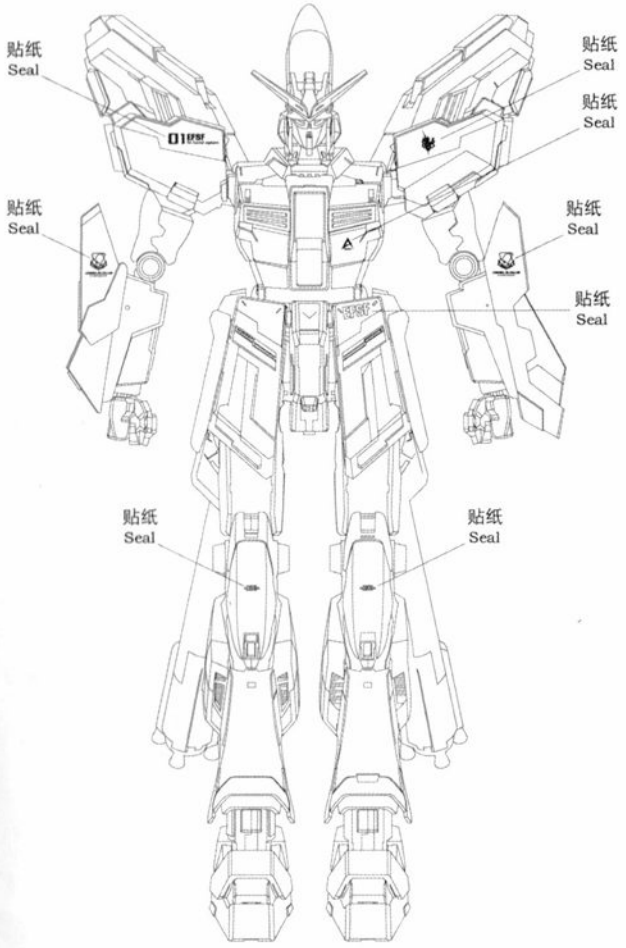

背面

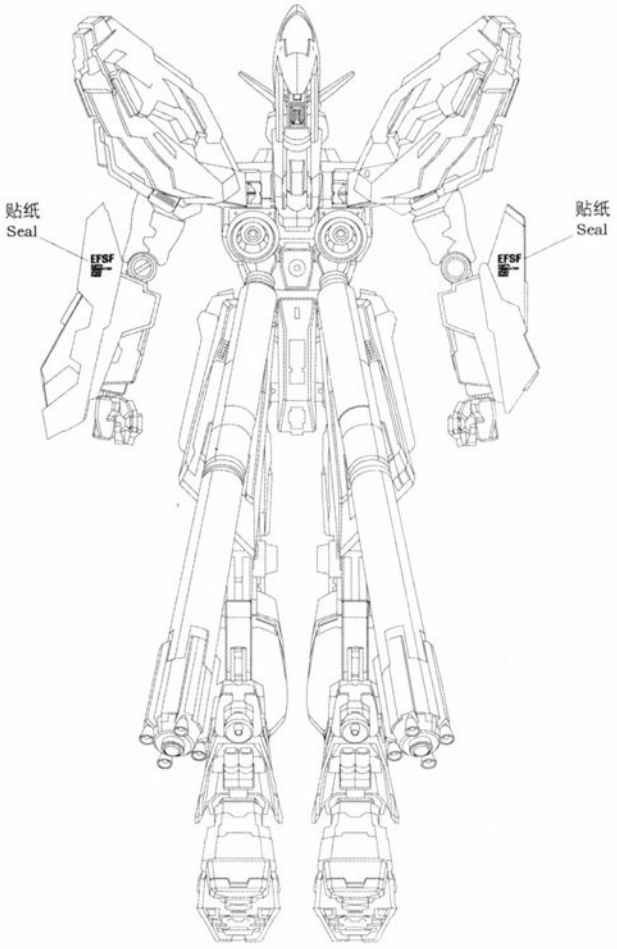

RX-93-ν2 Hi-νE·V·O

E.F.S.F.AMURO RAY' S CUSTOMIZE FIGHTER FOR NEW TYPE